AERATRON

CEILING FANS

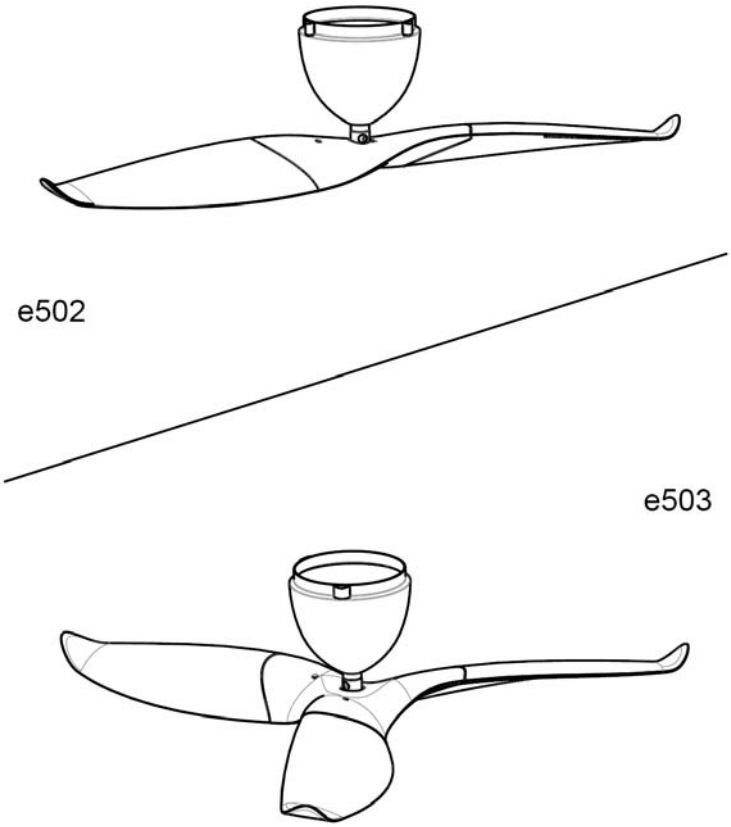

User Manual & Technical Specifications

Models: e502 & e503

Electricians

PLEASE FOLLOW THESES INSTRUCTIONS CAREFULLY & PAY SPECIAL ATTENTION TO THE "NOTES"
NOTES WILL ASSIST WITH AN EFFICIENT, PROPER INSTALLATION

Australian edition 2013

Instructions 3
General precautions 3
Location and installation requirements for your fan 3
Mechanical issues 4
Electrical issues 4
Unpacking your fan 5
Checking ceiling condition and preparing for fan installation 6
Installing Remote Control Receiver into hanger bracket 7
Preparing Fan Motor Housing 8
Remote Control Set-up 9
Code match the transmitter with the receiver 9
Code match the Transmitter (Hand held) with the Receiver 9
Attaching Fan Motor Housing to Motor Assembly 10
Closing Screw Cover 10
Assembly 10
Fan Blades and Middle Piece Assembly 11
e502 11
e503 12
Fan Blades to Shaft Assembly 13
Technical specifications 14
e503 and e502 14
Sloped Ceiling 15
Care & Cleaning 16
If the fan is noisy 16
If the fan rotates but does not create much airflow 16
General Information 17
Normal Wear and Tear. 17
Ceiling Fan Warranty. 17
Ceiling Fan Warranty Period. 17
Remote Control Warranty Period. 17
Balance of Warranty on Repaired or Replaced Products. 17
Transfer of Warranty. 18
The following is NOT covered by warranty. 18
Aeratron ceiling fan warranty details 19

Instructions

Thank you for choosing an Aeratron™ Ceiling Fan. You have chosen the best! We are confident that your new ceiling fan will provide many years of enjoyment.

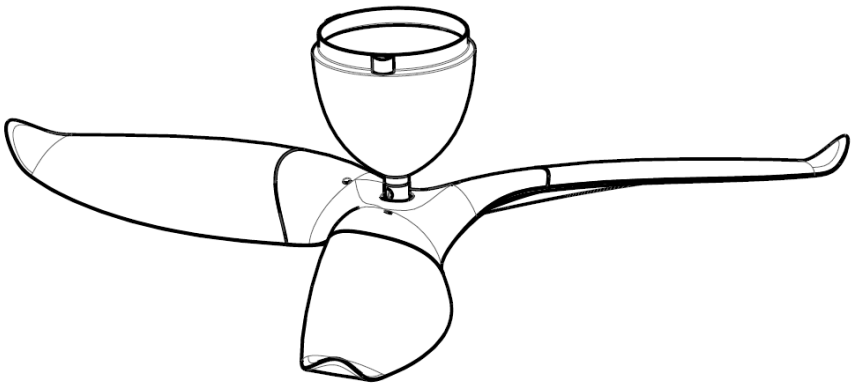

General precautions

Please read and follow these instructions carefully, and be mindful of all warnings shown throughout this manual.

This fan must be installed by a licensed and qualified electrician according to local authority regulations.

Be cautious! Read all instructions and safety information, and review the accompanying assembly diagrams before installing your new fan.

This appliance is not intended for use by persons (including children) with reduced physical, sensory or mental capabilities, or lack of experience and knowledge, unless they have been given supervision or instruction concerning use of the appliance by a person responsible for their safety.
Children should be supervised to ensure that they do not play with the appliance.

Location and installation requirements for your fan

To provide adequate clearance from the floor the lowest point on the fan blades must be at least 2.1m (7') from the floor in Australia, and at least 2.3m from the floor in the European Union and affiliated countries.

Note: For a fan mounted directly to the ceiling, the lowest point of the fan blade is approximately 300mm (1 foot) below the ceiling.

Make sure that the chosen location of the fan will not allow the rotating fan blades to come into contact with any object.

Ensure ceiling joists are sound and of adequate size and strength to support a 35Kg (77lb) load.

To reduce the risk of fire, electrical shock or personal injury, ensure that the fan mounting bracket is supported directly from the building structure. DO NOT mount to an outlet box.

The mounting bracket must be firmly screwed to a load bearing structure e.g. a concrete ceiling, steel structure or timber frame. If a timber frame is to be added it must be securely nailed or screwed between two beams.

Mechanical issues

Do not remove the fan from the ceiling after installation.

Do not attach the Fan Assembly before the Fan Motor Housing is installed and secured. To protect the finish, the Fan Motor Housing should be kept in the carton until ready to be installed.

After the fan is completely installed, check to make sure that all connections are secure to prevent the fan from falling and/or causing damage or injury.

To reduce the risk of personal injury, do not bend or damage the motor Drive Shaft or Fan Assembly when handling or installing

Aeratron fans are equipped with a self-balancing system and do not require manual balancing!

Electrical issues

! Means for disconnection must be incorporated in the fixed wiring in accordance with national wiring rules!

We highly recommend to install the fan with an **on/off switch** so that the current to the fan receiver can be turned off by this switch.

The fan can be used with a wall control and in conjunction with most home automation systems. Extra electronics are requires and please contact your fan supplier for further information.

To avoid possible electric shock during installation, be sure electricity is turned off at the main power box before commencing work. Disconnect power by removing fuse or turning off circuit breaker before installing the fan. Ensure all spliced connections are adequately insulated.

Note:
Nothing in this manual is intended to instruct or assist untrained or unqualified persons to install this product. Additionally, it is the responsibility of the installer and user to apply common sense and care at all times.

Unpacking your fan

Unpack your fan and check the contents. Do not discard the carton. If warranty replacement or repair is ever necessary, the fan should be returned in the original packaging.

Examine all parts. You should have the following:

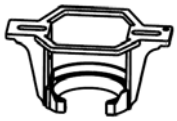

Hanger Bracket

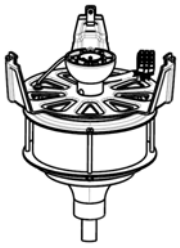

Motor Assembly

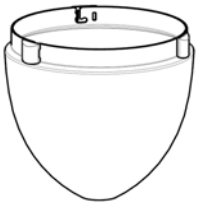

Motor Housing

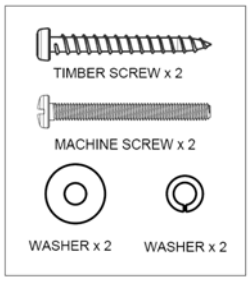

Hanger Bracket Fastener

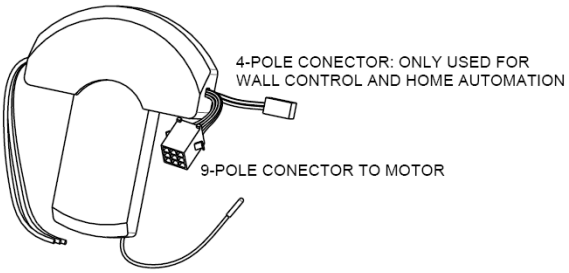

Receiver

Remote Control Transmitter

9V Battery

NOTE: Wall control and Home Automation control components are not included; please contact your local fan supplier for more information.

e502 PARTS

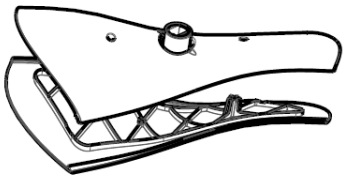

e502 HUB UPPER & LOWER x 1

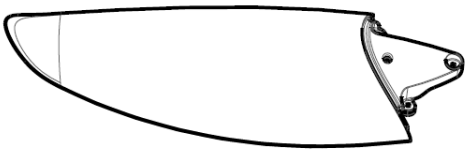

e500 BLADE x 2

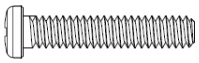

PIVOT SCREW x 2

HUB SCREW x 7

OR

e503 PARTS

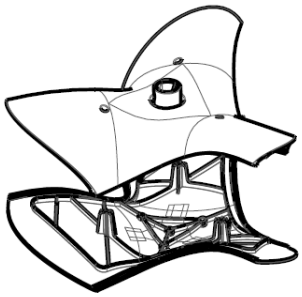

e503 HUB UPPER & LOWER x 1

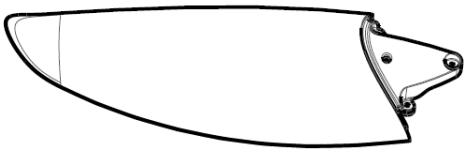

e500 BLADE x 3

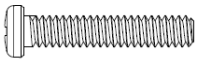

PIVOT SCREW x 2

HUB SCREW x 10

IF PROBLEMS OCCUR DURING INSTALLATION OF THE FAN, PLEASE CONTACT YOUR LOCAL OR NATIONAL CEILING FAN SUPPLIER AND ASK FOR ASSISTANCE BEFORE LEAVING THE SITE.

Checking ceiling condition and preparing for fan installation

Before commencing installation, turn off electricity supply at the main power box.
Disconnect power by removing fuse or turning off circuit breaker before commencing work.

Installation mounted to Ceiling Joist

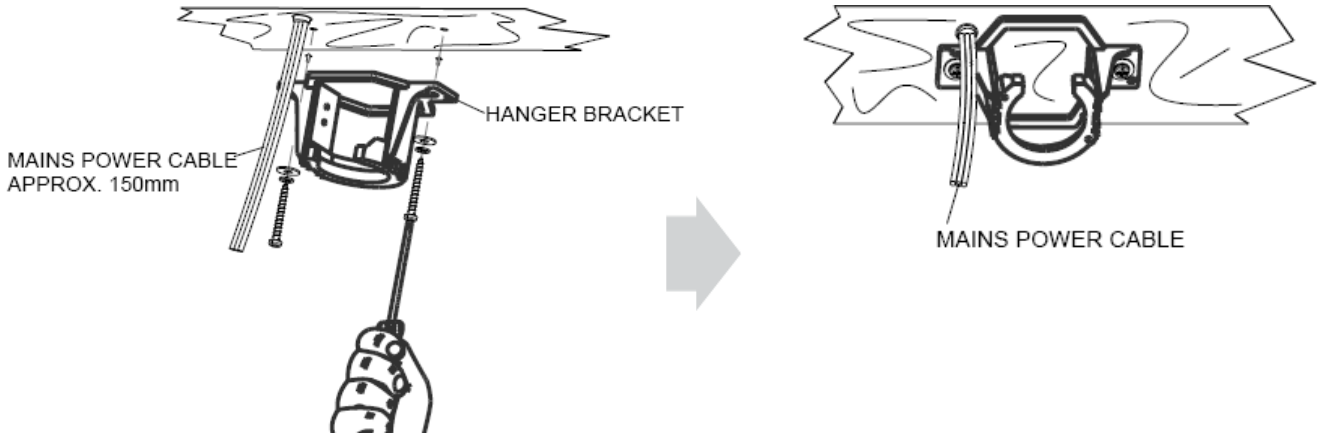

Install mounting bracket to ceiling joist using the screws and washer provided. The mounting plate should be able to hold a weight of at least 18kgs.
NOTE: Proper care must be taken when mounting to concrete ceilings. For safe mounting these ceilings may require plastic plugs / anchors and stronger screws.

Preparing Fan Motor Assembly

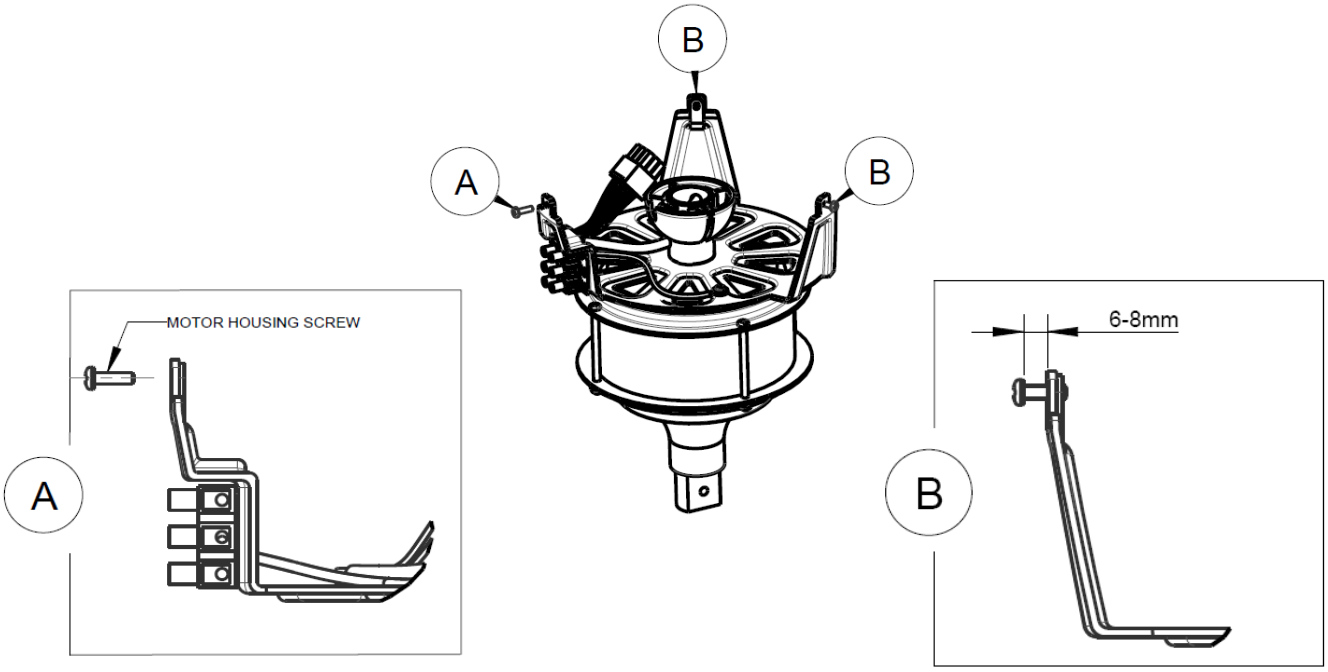

Remove one Motor Housing fixing Screw, and put it aside for re-assembly with Fan Motor Housing later

Adjust remaining two Motor Housing screws to provide clearance for installing the Motor Housing

Take care to keep Fan Motor Assembly level during installation to avoid marking ceiling.

Locate Suspension Ball in Hanger Bracket.

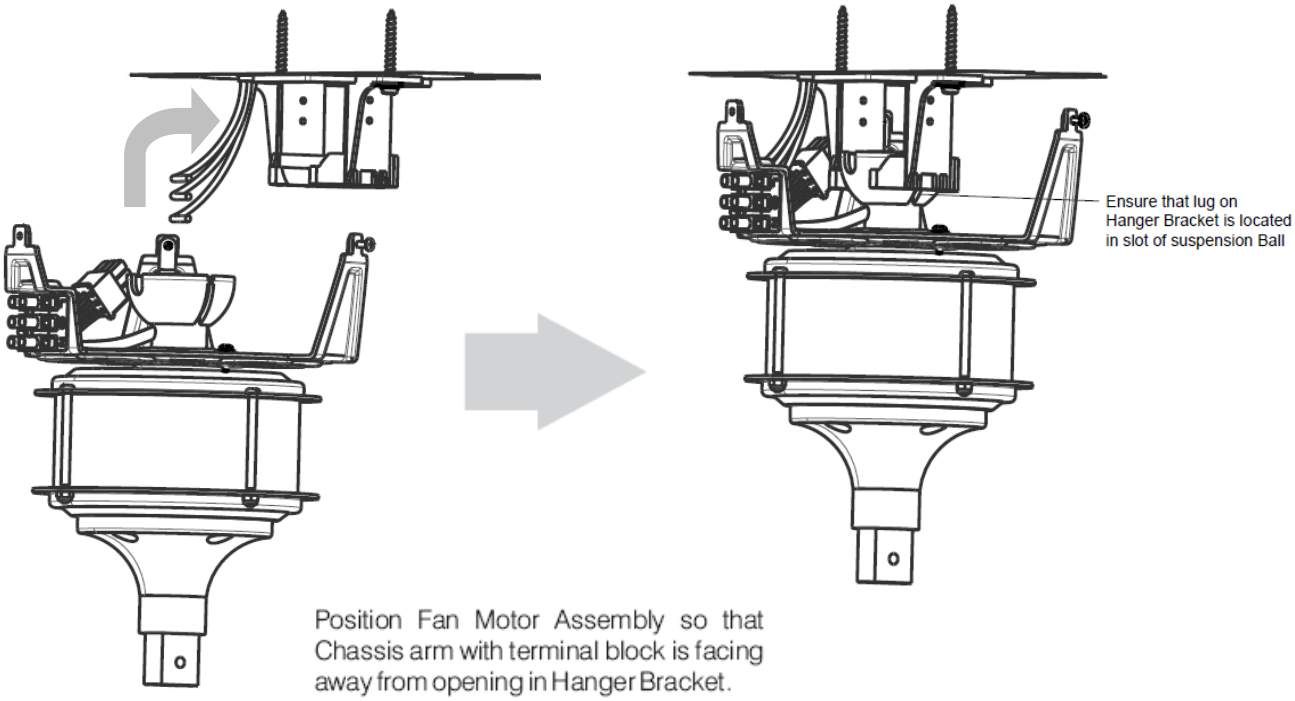

Installing Remote Control Receiver into hanger bracket

Note: Installing more than **1 Fan**!

Power up each Receiver and code match before installation (see page 9)

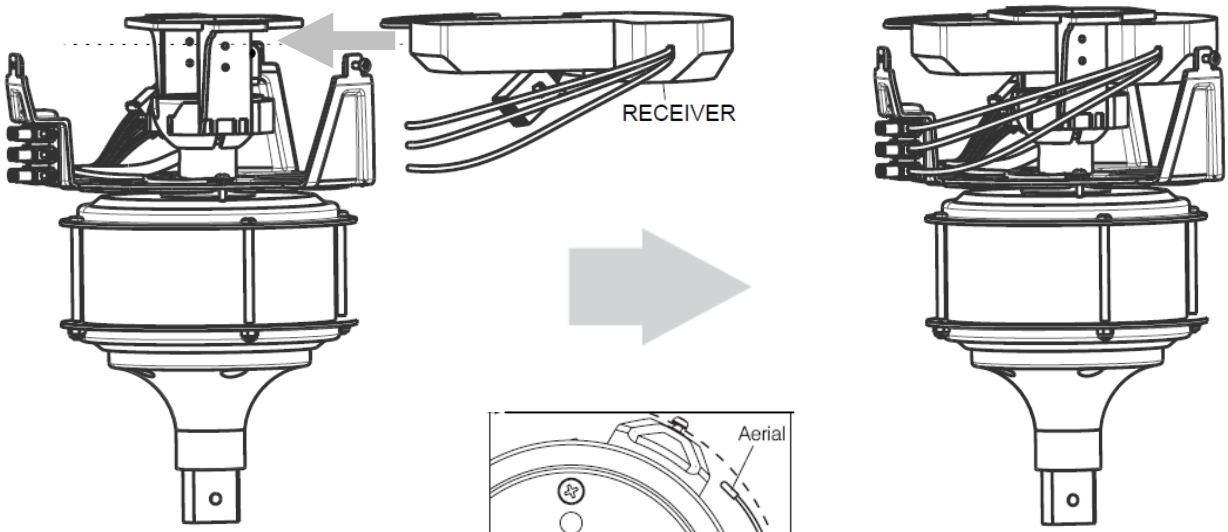

Slide Remote Control Receiver into Hanger Brackets in orientation shown

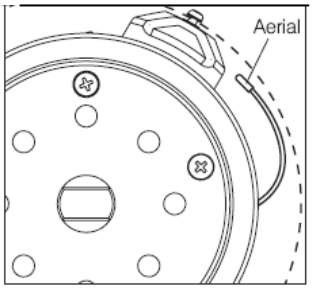

Fix Remote Control Receiver Aerial to ceiling within circle of Fan Motor Housing.

After installing receiver, re-adjust Fan Motor assembly to ensure the drive shaft is vertical

IF PROBLEMS OCCUR DURING INSTALLATION OF THE FAN, PLEASE CONTACT YOUR LOCAL OR NATIONAL CEILING FAN SUPPLIER AND ASK FOR ASSISTANCE BEFORE LEAVING THE SITE.

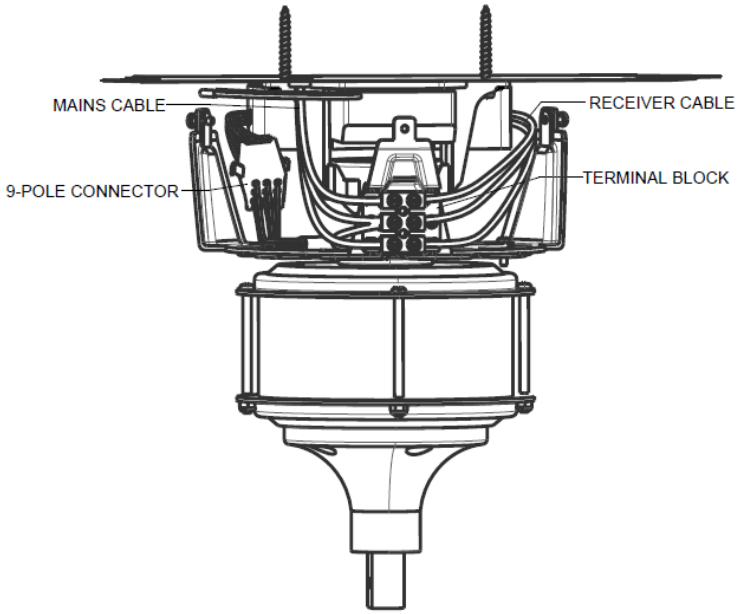

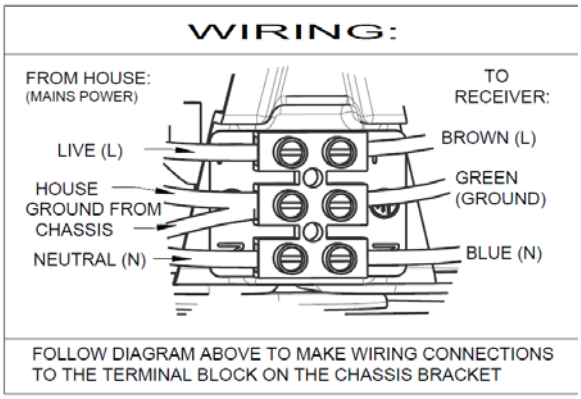

Make LIVE, GROUND and NEUTRAL connections from Mains Power (House) to Terminal Block.
Make LIVE, GROUND and NEUTRAL connections from Remote Control Receiver to Terminal Block.
Plug the 9-Pole plug connector from the DC Motor into the 9-Pole plug connector from the Receiver.

<u>NOTE</u>: ensure that the 9-pole connector is fully engaged! If not connected correctly the motor may rotate "jagged" or not rotate at all.

TEST MOTOR NOW (follow instructions on page 9) before mounting the motor housing.

Preparing Fan Motor Housing

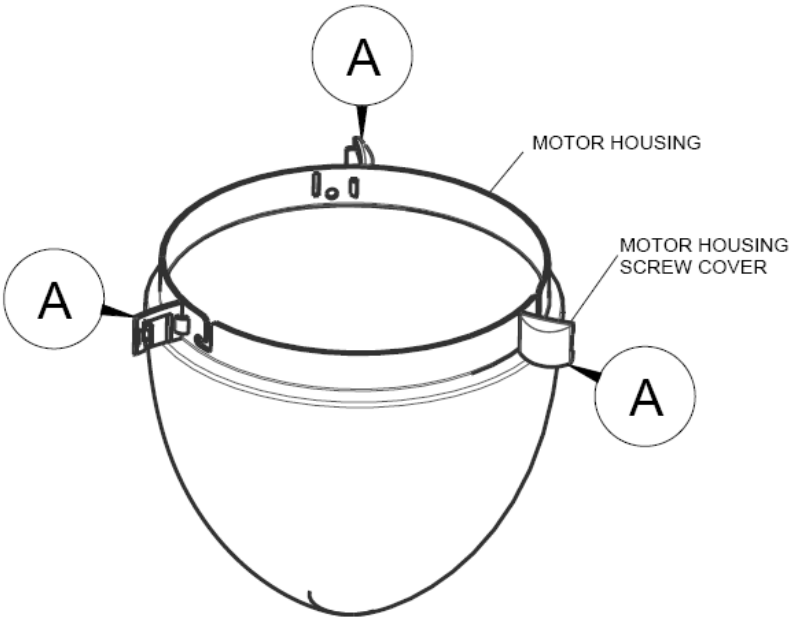

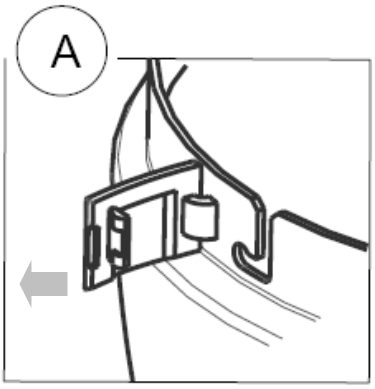

Ensure that Motor Housing Screw Covers are in full open position

Remote Control Set-up

Code match the transmitter with the receiver

Note: receiver itself has **NO** DIP switch.

Remote Control Code Setting

Set your Dip Switch to control individual fan(s) (one per fan handset) and only **power to one fan receiver per time**. Chose same code setting for up to 16 fans controlled by one handset within a 7m radius with power to all fans.

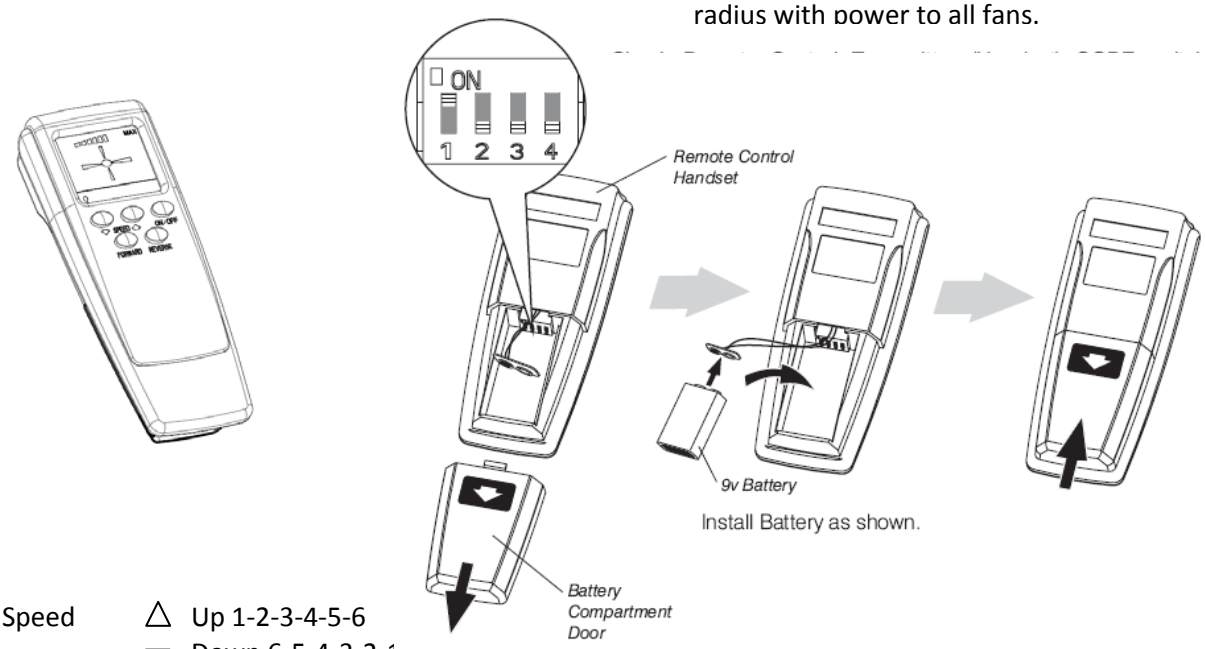

Speed △ Up 1-2-3-4-5-6
▽ Down 6-5-4-3-2-1

To start the fan press speed button
To change speed of fan press △ or ▽ (indicated by a short buzzer sound)
LCD indicates maximal speed (max)

On/Off Press the button to start or switch off the fan

Forward For cooling effect and in combination with Air Condition System

Reverse To support heating system to exchange temperature

Code match the Transmitter (Hand held) with the Receiver

1. Set the code to be encoded by the Dip Switch of transmitter
2. Switch on the main power to activate the receiver, indicated by (one beep)
3. Within 3 minutes after the power is turned on (one beep), press the transmitter's "ON/OFF" key and do not release (min. 5 seconds) until receiver issues (four beep) short sounds which indicates successful code match
4. After successful code match, the fan automatically returns to the original speed as indicated on LCD screen
5. Press any transmitter button to check for proper functioning
6. For code changes, repeat steps 1 to 5

→ The transmitter and receiver will memorise the code for future use (also if switched off).

Attaching Fan Motor Housing to Motor Assembly

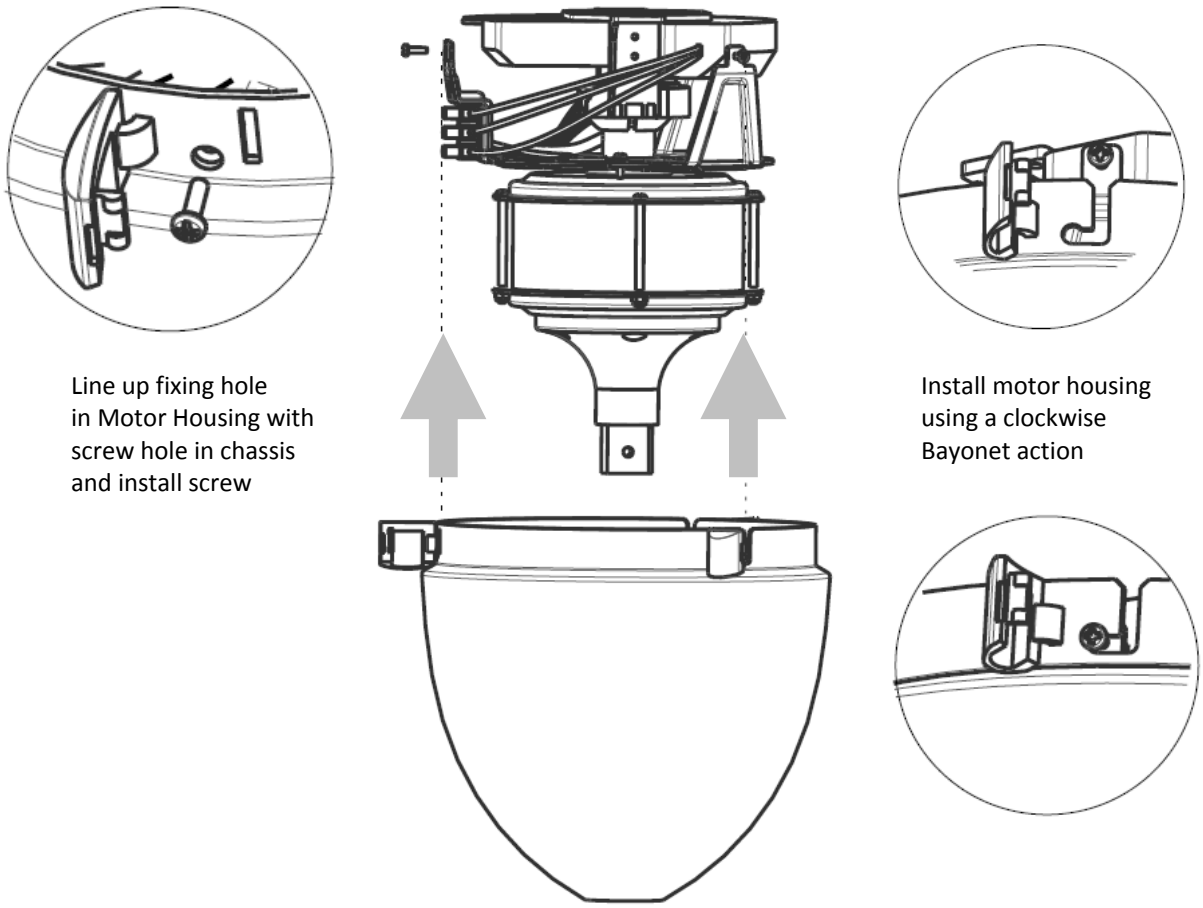

Ensure that Fan Motor Housing fixing point with hole (not bayonet slot) is aligned with chassis arm from which fixing screw was removed (see page 6).

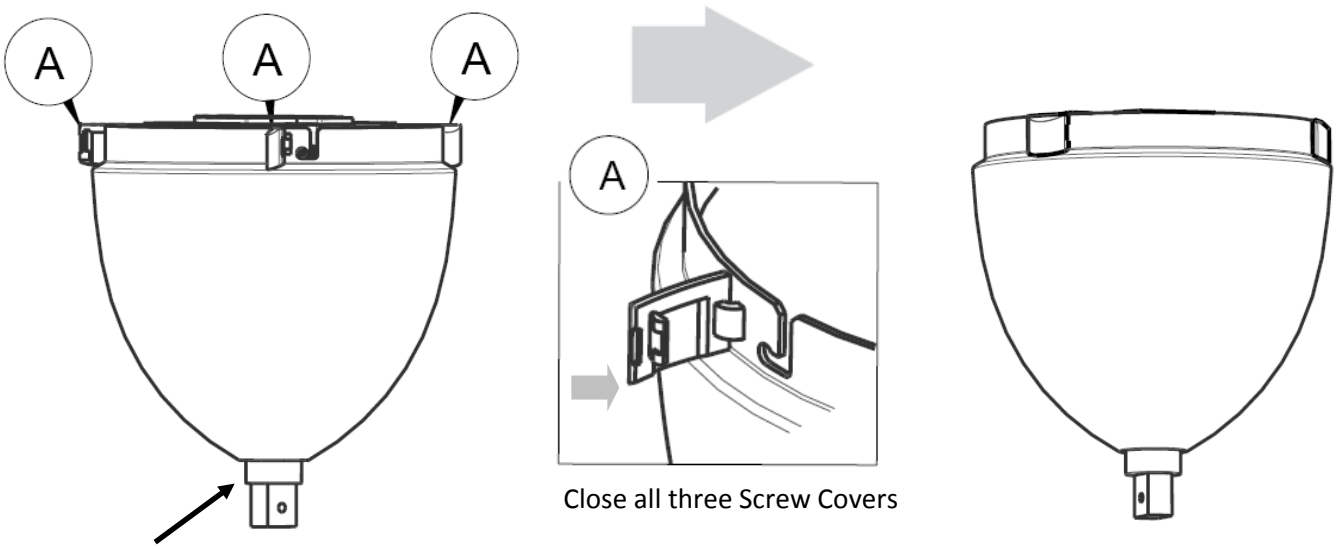

<u>NOTE</u>: Please ensure that the drive shaft is centred with the motor housing opening!

Fan Blades and Middle Piece Assembly

! CONSTANTLY HANDLE FAN WITH CARE AT ALL TIMES TO AVOID DAMAGING THE FAN/SURFACE !

e502

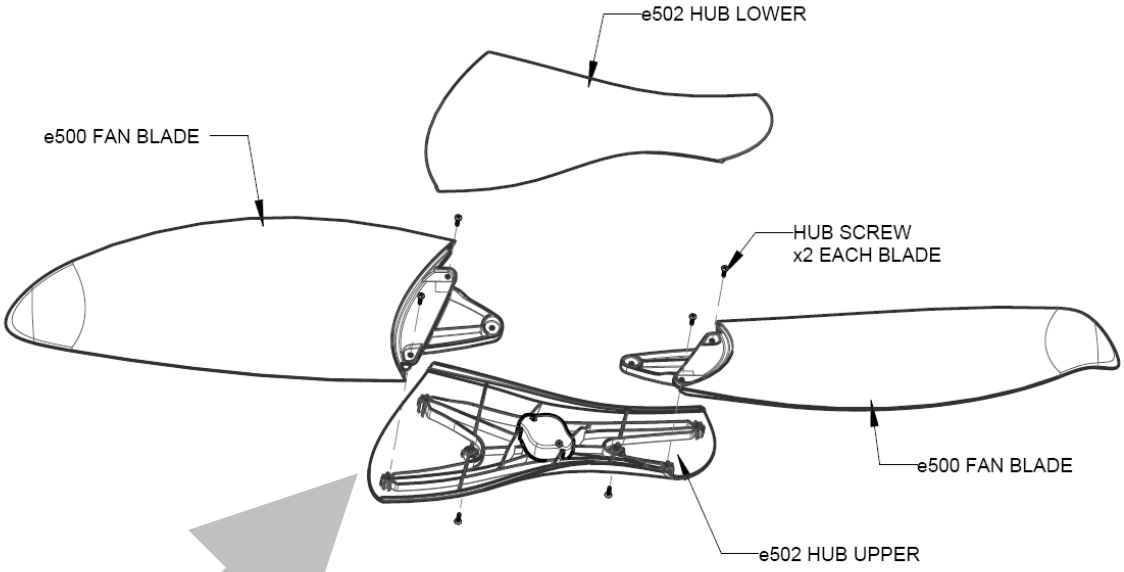

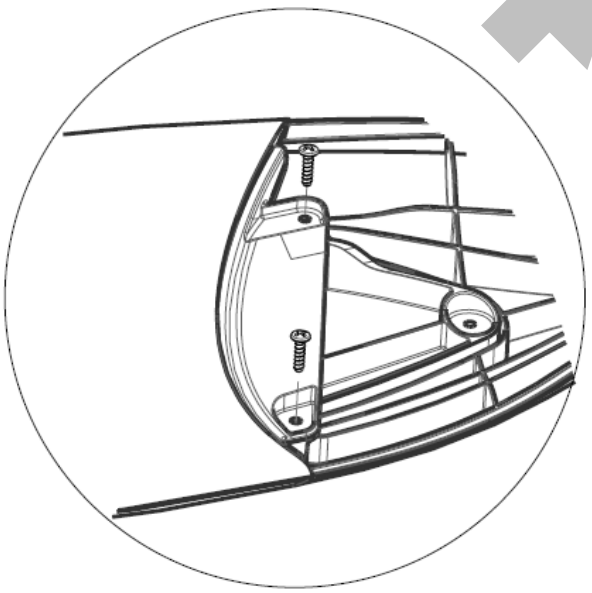

Place e502 Hub Upper onto a clean working area.

Line-up the three mounting holes in the e500 Fan Blade with the two screw boss and hole in the Hub Upper.

<u>NOTE:</u> Please use a power tool with torque setting to ensure tight, secure assembly

Fix the e500 Fan Blade tight and firm using 2 Hub screws

Fix second e500 Blade tight and firm using 2 Hub screws

With care, turn the fan over and fasten the e502 Hub Lower to the fan assembly using the 2 Hub screws

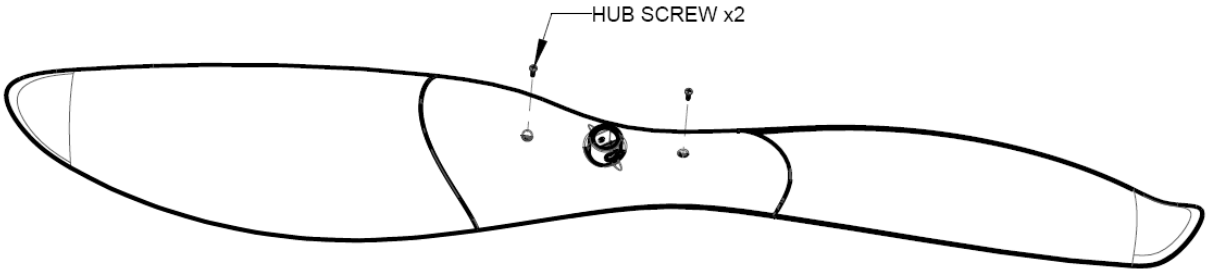

! CONSTANTLY HANDLE FAN WITH CARE AT ALL TIMES TO AVOID DAMAGING THE FAN/SURFACE !

e503

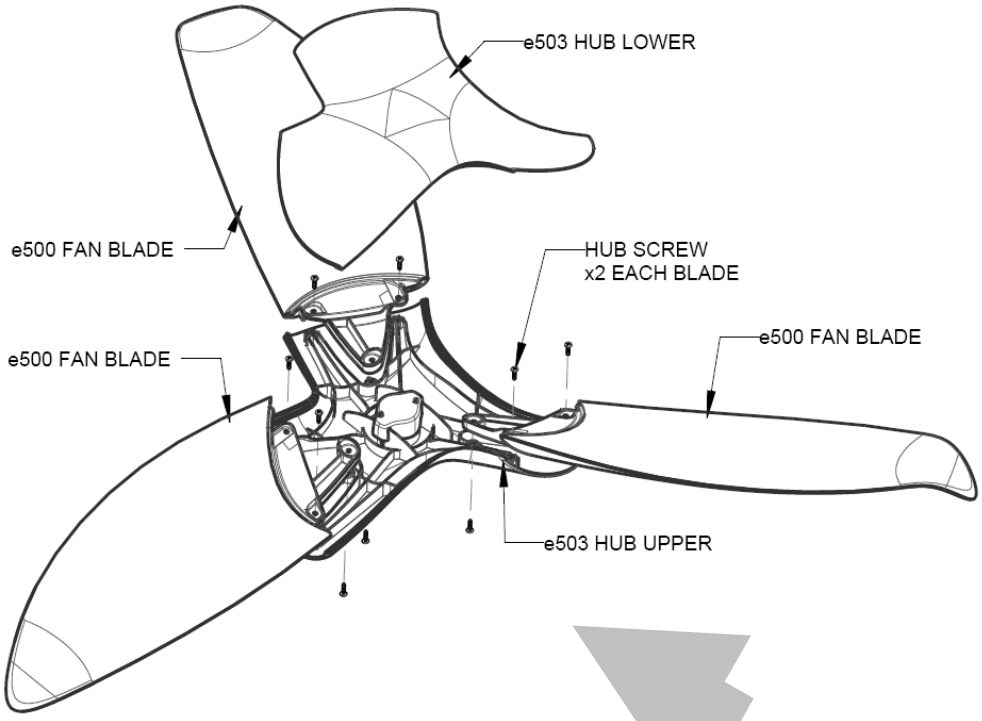

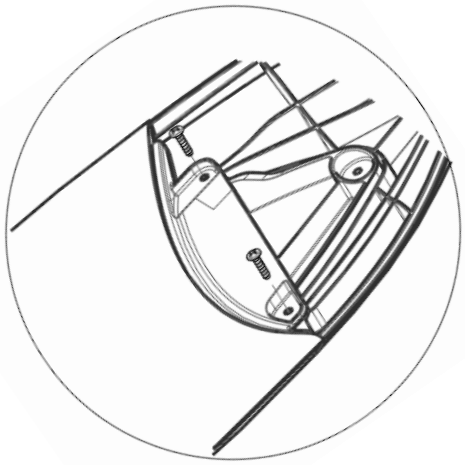

Place e503 Hub Upper onto a clean working area.

Line-up the three mounting holes in the e500 Fan Blade with the two screw boss and hole in the Hub Upper.

<u>NOTE:</u> Please use a power tool with torque setting to ensure tight, secure assembly

Fix the e500 Fan Blade tight and firm using 2 Hub screws

Fix second and third e500 Blades tight and firm using 2 Hub screws for each Blade
With care, turn the fan over and fasten the e503 Hub Lower to the fan assembly using the 3 Hub screws

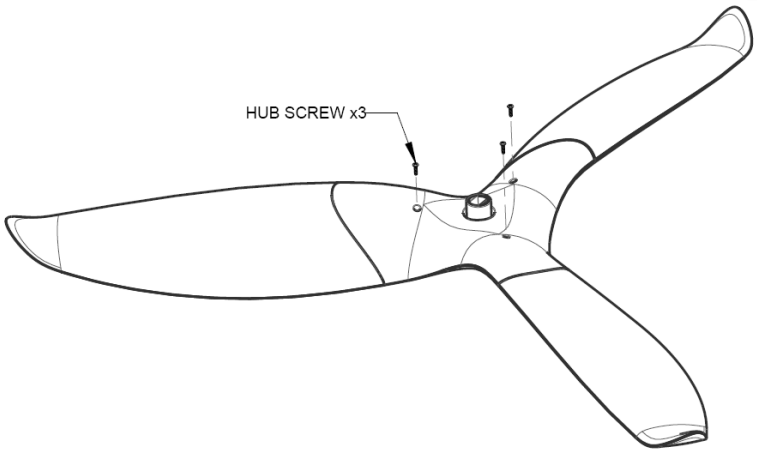

Fan Blades to Shaft Assembly

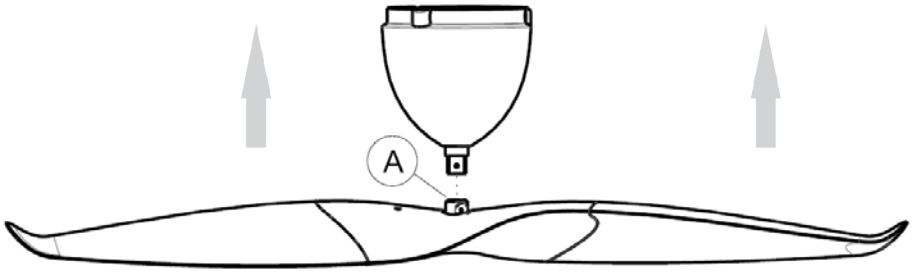

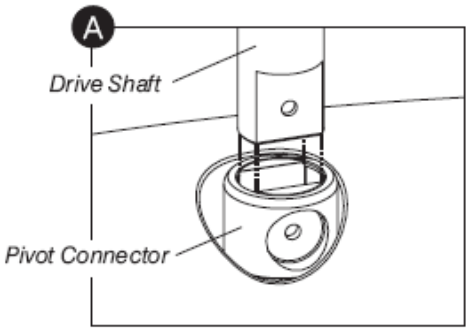

Align flats on Pivot Connector with flats on Drive Shaft and install Fan Blade by sliding Pivot Connector onto Drive Shaft.

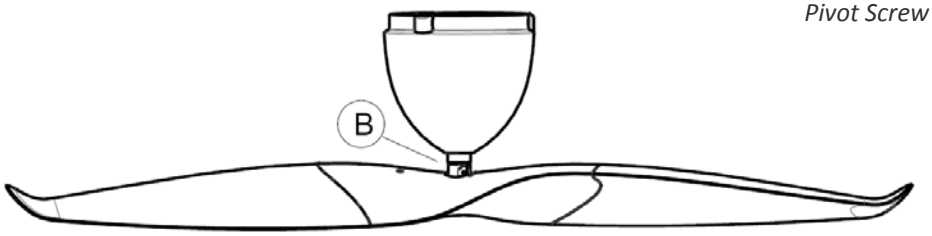

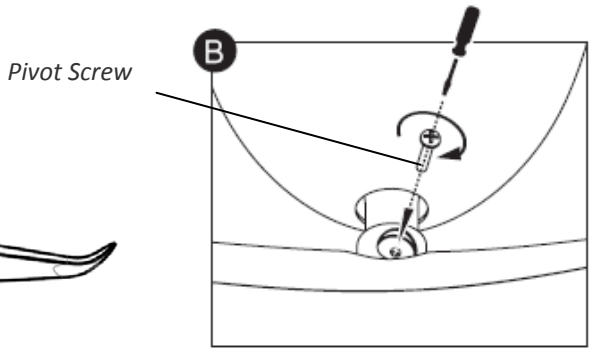

Hold Fan Blade in position, insert blade fixing screw and tighten securely.

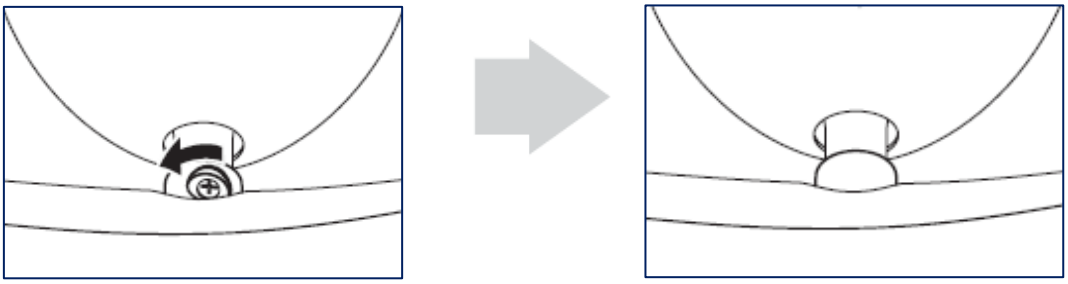

Rotate Screw Cover to hide screw head. (Note: Rotating the Screw Cover will prevent Pivot screw from falling out should it become loose.)

Technical specifications

e503 and e502

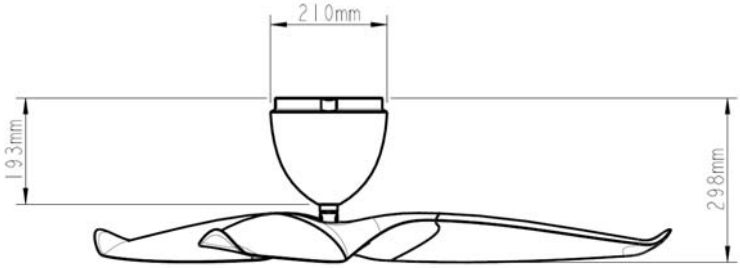

Colour: white/ silver/ black
Remote control: Hand Held, RF

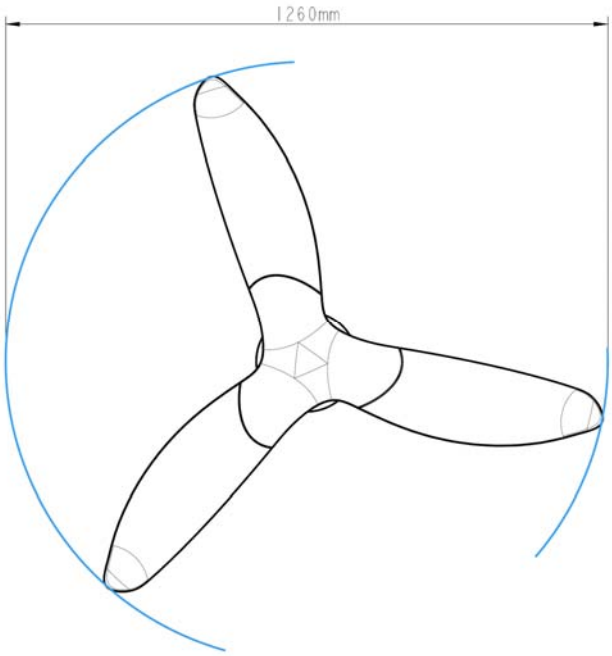

Dimensions: **e502 as e503**

Operating speed (rpm)/
Power Usage (Watt)

e503
Speed 1: 51 rpm/ 3.8 W
Speed 2: 70 rpm/ 4.5 W
Speed 3: 103 rpm/ 7.5 W
Speed 4: 119 rpm/ 9.5 W
Speed 5: 139 rpm/ 13.6 W
Speed 6: 158 rpm/ 18 W

e502
Speed 1: 52 rpm/ 3.9 W
Speed 2: 73 rpm/ 4.5 W
Speed 3: 113 rpm/ 7.7 W
Speed 4: 131 rpm/ 9.6 W
Speed 5: 153 rpm/ 13.6 W
Speed 6: 177 rpm/ 18.2 W

Sloped Ceiling

Technical Specification Aeratron Fans
Raked Ceilings up-to 12°

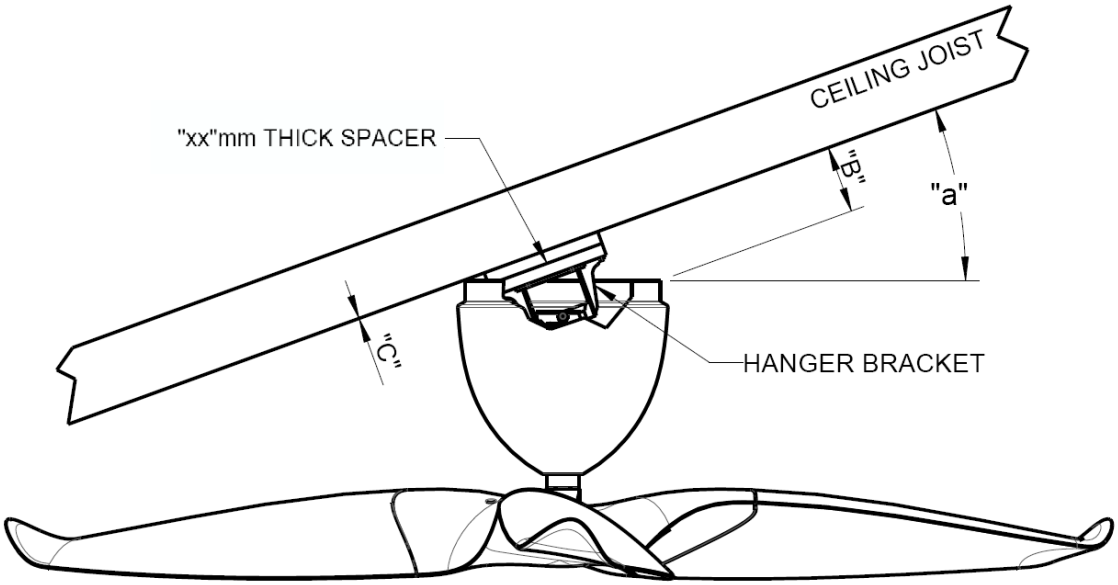

ANGLE "a°"	HANGER BRACKET	SPACER "XX"mm	CLEARNCE "B"	CLERANCE "C"
0°- 3°	YES	NO SPACER	~10mm at 3°	~1mm at 3°
3°- 10°	YES	12mm SPACER	~32mm at 10°	~2mm at 10°
11°- 12°	YES	16mm SPACER	~42mm at 12°	~1mm at 12°

FOR MORE THAN 12°ANGLE; PLEASE CONTACT www.Aeratron.com

RECOMMENDED SPACER DIMENSIONS

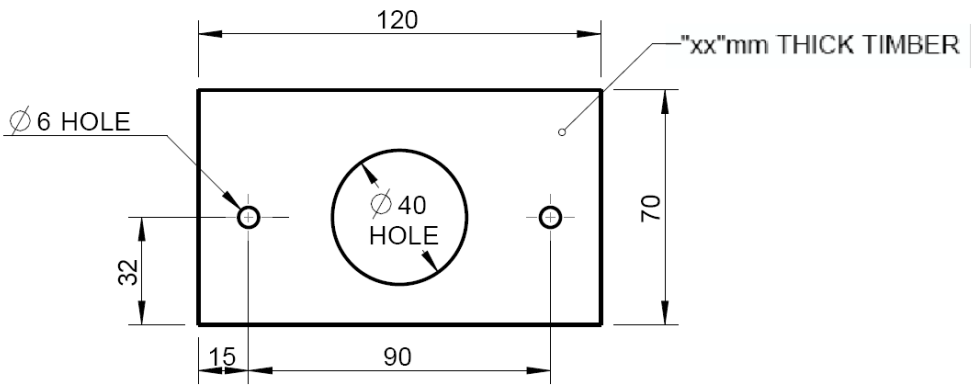

NOTE:
FEED THE SCREWS TROUGH THE HANGER BRACKET,THE "xx"mm THICK SPACER AND FASTEN TO THE CEILING JOIST.
ENSURE SCREWS ARE THE RIGHT LENGTH AND SECURELY TIGHTEND.

IF PROBLEMS OCCUR DURING INSTALLATION OF THE FAN, PLEASE CONTACT YOUR LOCAL OR NATIONAL CEILING FAN SUPPLIER AND ASK FOR ASSISTANCE BEFORE LEAVING THE SITE.

Care & Cleaning

Regular cleaning of the Aeratron Ceiling fan blades and fan motor housing is the only maintenance that is needed. Due to the self-balancing design, a large build up of dust on blades may only in extreme cases create an imbalance, causing the blade to wobble during use. This is likely to be more apparent on fans with an extension rod.
Regular cleaning of the blade is recommended to prevent dust from building up.

1. When cleaning your fan, only use a soft brush or lint free cloth to avoid scratching the finish. DO NOT use water when cleaning your ceiling fan. It could damage the motor or blades and/or create the possibility of electric shock.
2. When dusting the blades, you must support the blades to prevent bending - no pressure should be applied to the blade pivot. After cleaning the blades, check to ensure that the Drive Shaft is vertical, otherwise the fan may wobble.
3. Occasionally, it may be necessary to re-tighten the fan blades and fan motor housing fixing screws to prevent any clicking or humming sounds during operation. This is especially true in climates with broad temperature and humidity ranges.
4. If you experience any flaws in the operation of your fan, please check the points in the Trouble Shooting section below.

WARNING: Except for items 1 to 3 below, the following require access to areas of the fan which carry lethal voltage and must be carried out by properly qualified personnel.
ONLY points 1 to 3 below can be carried out by the user.

TROUBLE SHOOTING:

If the fan does not operate properly, or turns on or off at random.

1. If applicable, change the battery in the Remote Control Transmitter (Handset).
2. Reset code match(see page 9)
3. Reset the code, using a different dip switch setting (see page 9)
4. Multiple fans, power to all fans > reset > control all fans with one handset > OR > power up (first) 1 fan > reset > power disconnect, power up second fan > reset > power disconnect . . . . . for the use of one handset (code match) per fan (see page 9)
5. Disconnect the 9-pole connector and push all the cable into the connecters (motor and receiver side), hold the connectors on the cables while re-connecting (see page 8)
6. Check the main and branch circuit breakers and/or fuses.
7. Check the wire connections to the fan.
8. Other RF devices may obstruct the handset to receiver signal.

If the fan is noisy

9. Check to make sure that the screws securing the Suspension Ball, Fan Motor Housing and Fan Blades are tightened securely (see pages 11 and 12).
10. Check that all the screws in the Hanging Bracket are tight.
11. Excess wind can lift the fan blades and result in some extra noise.

If the fan rotates but does not create much airflow

12. The room may contain items which obstruct the air flow.
13. The fan may be too small for the size of the room.
14. The fan might be in reverse function.

Note: In some areas, signals are sent through the power lines by the electricity supplier for the control of off peak hot water, street lights and so on. These signals may cause an intermittent humming in the ceiling fan. Filters are available in Australia at customer cost. It is not the fault of the ceiling fan.

IF PROBLEMS OCCUR DURING INSTALLATION OF THE FAN, PLEASE CONTACT YOUR LOCAL OR NATIONAL CEILING FAN SUPPLIER AND ASK FOR ASSISTANCE BEFORE LEAVING THE SITE.

General Information

1. All electrical motors, including fan motors make some noise, and may feel hot to the touch. This is NOT a fault.
2. Ceiling fans tend to move during operation due to the fact that they are not rigidly mounted. (Rigid mountings can generate excessive vibration and stress on the mountings).
   Movement of a couple of centimetres is quite OK and does not suggest that the fan will fall down. The Aeratron fan is mounted securely on a metal Hanger Bracket with rubber cushioning and a ball joint to allow free movement. Please note that due to manufacturing variations not all Aeratron ceiling fans are exactly the same - some may move more than others. Note: Excessive wobble can be caused by the Drive Shaft not being positioned vertically. This can be easily rectified by adjusting the position of the Fan Motor Assembly in the Hanger Bracket (see page 7).
3. Ceiling fans are an environmentally smart choice to help cool you in your home. They work by creating air flow which causes a cooling sensation on the skin. The faster the speed of the air flow, the greater the cooling sensation. Ceiling fans do not work by cooling the room, so they should be switched off when there is no one in the room, to save energy. The effectiveness of ceiling fans is also dependent on the humidity in the air - they are more effective in humid environments, and less so in dry ones.
4. During winter, an in reverse turning fan helps to reduce heating costs. Warm air rises to the ceiling, where it cannot be felt by the occupants of a room, especially in areas with high ceilings. The fan helps to keep warm air away from the ceiling, and mixes it with the air below.

Normal Wear and Tear.

1. Threaded components working slightly loose or parts even slightly damaged or bent during vigorous cleaning or bumping can cause wobble and noise. This is not covered under warranty, but care during maintenance and cleaning should prevent this from occurring.

Ceiling Fan Warranty.

You must have the original purchase receipt or bill of sale to make a warranty claim. No claim will be accepted unless proof of date of purchase is available at the time of making the warranty claim.

Ceiling Fan Warranty Period.

The ceiling fan itself, excluding the Remote Control Transmitter and Receiver, is covered by a 3 year in-home warranty. During this period, Aeratron Pty Ltd will, at its discretion, repair or replace defective product. Labour and product delivery costs are bourn by Aeratron Pty Ltd during this 3 year period. The cost of obtaining or using special access equipment (scissor lifts, scaffolding etc.) is specifically excluded, and it is the responsibility of the owner to provide such equipment and have it safely installed and operated.

Remote Control Warranty Period.

In general, Aeratron Pty Ltd Remote Control Receivers and Transmitters (Handsets) are covered by a 1 year in-home warranty under the same conditions as described above for fans.

Balance of Warranty on Repaired or Replaced Products.

Any replaced or repaired product is covered only by the balance of the warranty remaining on the original article.

Transfer of Warranty.

If the dwelling where the fan or remote control is installed changes hands, the balance of the warranty passes to the new owner, providing the original bill of sale for the product is retained by the new owner.

Warranty for the fan does not cover damage to the fan if it is moved from one dwelling to another during the warranty period. The warranty is voided in total if the product is sold as second hand goods.

The following is NOT covered by warranty.

1. Any damage incurred after delivery to the owner that is not caused by a fault in the products materials or workmanship; damage from lightning or power surges; incorrect installation; damage due to incorrect installation; noise or other influence of ripple control or information access systems operated over power delivery infrastructure; water damage of any kind; installation or use outdoors; damage arising from connection to or use with alternative power systems (e.g. inverters, solar, etc.).
2. Ceiling fans not installed by a licensed electrician.
3. Repair of a ceiling fan used incorrectly, accidentally damaged, modified in any way or not serviced in accordance with the maintenance instructions.
4. Travelling costs incurred by Aeratron Pty Ltd personnel or service agents and/or the cost of transporting and insuring the ceiling fan between the nearest Aeratron Pty Ltd agents' service depot and its normal location. These costs must be met by the purchaser.
5. Subject to any statutory provisions to the contrary, claims for damage to furniture, carpet, walls, ceilings, foundations or any other consequential loss either directly or indirectly resulting from a faulty ceiling fan.
6. Signals sent through the mains power supply by the electricity supplier for off peak hot water, and other signals including those for street lights and such. These signals may cause an intermittent humming in the ceiling fan. It is not the fault of the ceiling fan.
7. Aeratron Ceiling Fans not purchased and installed in Australia.
8. A service call fee will be charged where; there is nothing wrong with the ceiling fan or; the defective operation of the ceiling fan is due to failure of electricity or; the installation is not in accordance with Aeratron Pty Ltd instructions and/or applicable local regulations or; the defects have been caused by incorrect application or abuse of the ceiling fan or; the damage has been caused by unauthorised persons attempting to repair the fan.

WARRANTY PHONE NUMBER 1300 116 305 (AUSTRALIA ONLY 9am to 5pm East)

Please Note: When calling for warranty you will require the following information; date of purchase; model and colour of the fan. The installing electrician's details may also be required.

Aeratron ceiling fan warranty details

Please File with your Purchase Receipt

Customer Details

Name; _____

Address: _____

Post Code: _____

Phone Number: _____

Fan Details

Model: _____

Colour: _____

Date of Purchase: _____

Electricians Details

Name of Electrician: _____

Licence Number: _____

Please send to:

Aeratron Pty Ltd
"Warranty"
PO Box 3006
Tamarama NSW 2026
Australia

THANK YOU!

YOUR AERATRON TEAM

Australian edition 2013.