Ascot

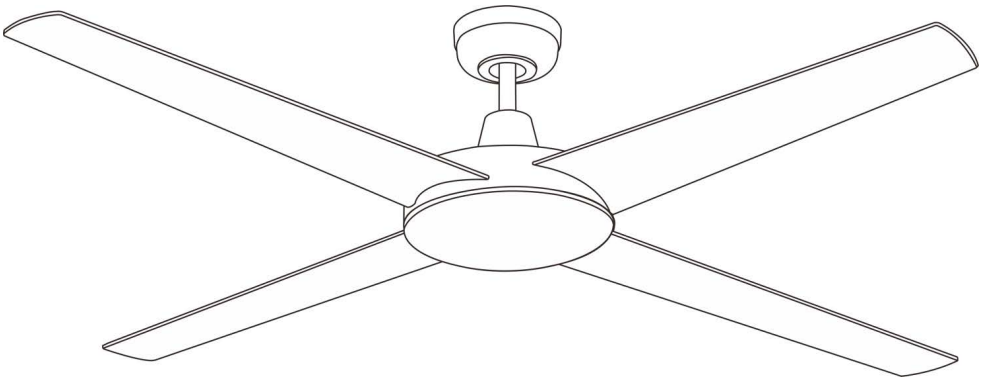

without light

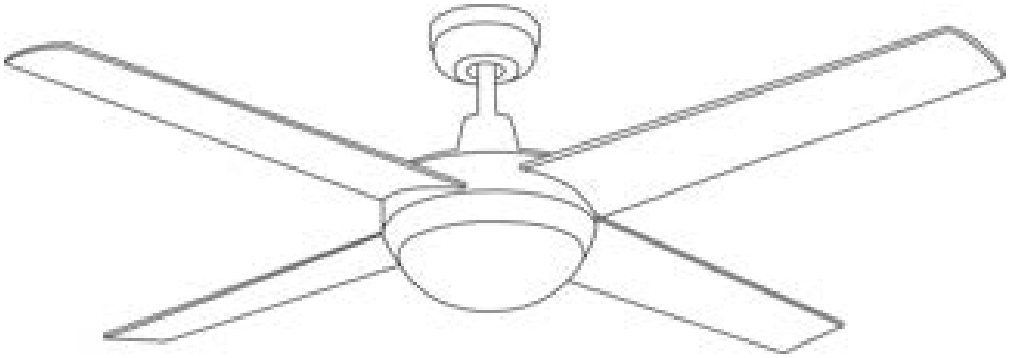

with light

Four Blade 48”or 52”

ATTENTION ELECTRICIANS:

ANY PROBLEMS FOUND DURING INSTALLATION OF THE FAN PLEASE CONTACT THE NATIONAL WARRANTY NUMBER PRIOR TO LEAVING SITE. ***DO NOT REMOVE THE FAN FROM THE CEILING UNLESS INSTRUCTED TO DO SO.***

National Warranty Number | 1300 116 305 Monday to Friday 9am to 5pm AEST

NOTE: THIS FAN MUST BE INSTALLED BY A LICENSED AND QUALIFIED ELECTRICIAN IN ACCORDANCE WITH LOCAL AUTHORITY REGULATIONS

Australian Edition Version 1.0 August 2019

IMPORTANT INFORMATION - PLEASE READ BEFORE ATTEMPTING INSTALLATION

1. Please read these instructions carefully, be mindful of all warnings and safety information shown throughout this manual. Should you have any questions please call **1300 116 305**.
2. Please review the accompanying assembly diagrams before attempting installation.
3. This fan MUST be installed by a licensed & qualified electrician according to local authority regulations and in accordance with current wiring rules AS/NZS3000.
4. A copy of the purchasing receipt and proof of installation by a licensed and qualified electrician according to local authority regulations is required for all warranty claims.
5. Where special access equipment is required in accordance with local authority regulations all associated costs are the responsibility of the owner.
6. We reserve the right to charge a $175 service fee for all call outs where the fan is found not to be defective and / or where access is not provided.
7. The fan and light (if supplied) **MUST be earthed.**
8. Do not mix blades between fans. The blades are provided as a complete matching set.
9. The fan is designed to function only using the wall controller provided in the box. Your warranty will be void if any non approved (by EM Imports) wall controllers or remote units are used with the fan.
10. The means for mains power disconnection must be incorporated in the fixed wiring in accordance with national wiring rules.
11. It is the responsibility of the owner to have their electrician check the installation of the fan if any unexpected noises are found.
12. Installations using steel beams, grid ceilings and flexible structures are not recommended due to their inability to absorb vibration caused through the normal operation. Timber is the recommended to mount the fan.
13. To avoid possible electric shock during installation, be sure electricity is turned off at the main power box before commencing work. Disconnect power by removing fuse or turning off circuit breaker before installing the fan. Ensure all spliced connections are adequately insulated.
14. Warning! Do not allow the rotating fan blades to come into contact with any object, this can cause serious injury or death.
15. Damage caused by; incorrect installation, force-majeure, lightning, electrical surges & spikes, exposure to water, pests or moisture is not covered under warranty.
16. In accordance with AS/NZS60355-1 & ASNZS60355-2-80: "This appliance is not intended for use by persons (including children) with reduced physical, sensory or mental capabilities, or lack of experience and knowledge, unless they have been given supervision or instruction concerning use of the appliance by a person responsible for their safety."
17. Children should be supervised to ensure that they do not play with the appliance.
18. Children shall not play with the appliance.
19. Cleaning and user maintenance shall not be made by children without supervision.

Please Note: Nothing in this manual is intended to instruct or assist untrained or unqualified persons to install this product. Additionally, it is the responsibility of the installer and user to apply common sense and care at all times.

Please note: Minor design changes may result in slight variations between the product illustrations and the fan contained within the packaging.

NOTE: THIS FAN MUST BE INSTALLED BY A LICENSED AND QUALIFIED ELECTRICIAN IN ACCORDANCE WITH LOCAL AUTHORITY REGULATIONS

LOCATION AND INSTALLATION REQUIREMENTS

Provide adequate clearance from the floor. The lowest point on the fan blades must be at least 2.1m (7 feet) from floor level in Australia.
Make sure that the chosen location of the fan will not allow the rotating fan blades to come into contact with any objects.
Ensure ceiling joists are sound and of adequate size and strength to support a 25Kg (55lb) load.
To reduce the risk of fire, electrical shock or personal injury, ensure that the fan mounting bracket is supported directly from the building structure. After the fan is completely installed, check to make sure that all connections are secure to prevent the fan from falling and/or causing damage or injury.

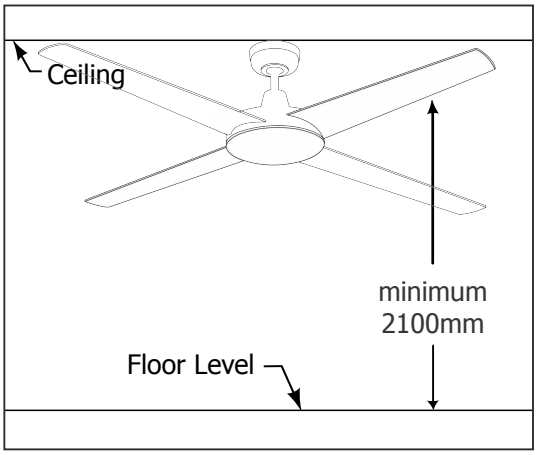

To reduce the risk of personal injury, do not bend or damage the motor or Fan Assembly when handling or during installation. Please ensure special care is taken when assembling the fan. Each screw must be sufficiently tightened.

FAN ASSEMBLY

In accordance with Australian Standards, the fan blades must be at least 2.1 metres above floor level and the blades require at least 300mm clearance to the nearest object.

Secure the hanger bracket to ceiling beam or a suitable piece of timber inserted between the ceiling beams. Install the mounting bracket using two (2) long screws as supplied within the package.

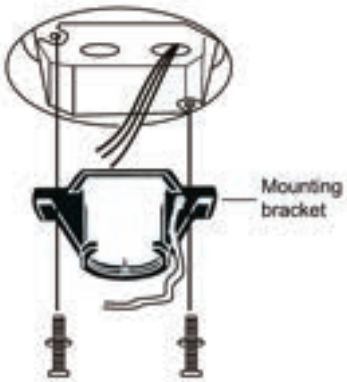

Place fan into hanger bracket and align ball joint slot with hanger bracket as illustrated below.

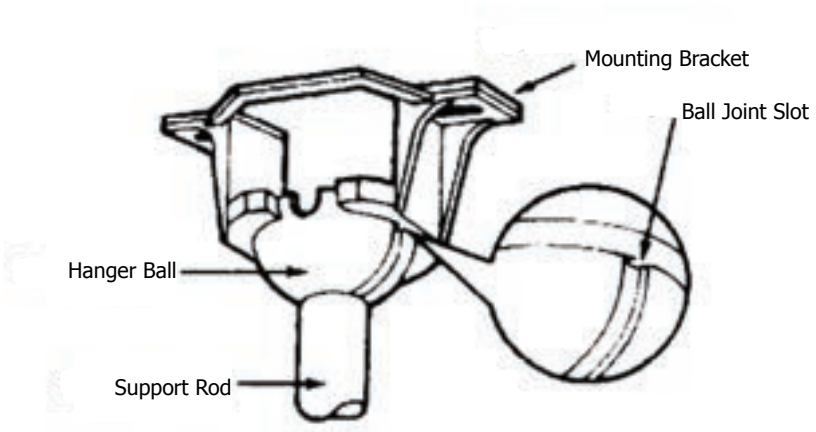

FAN ASSEMBLY

DANGER! Before commencing installation, turn off electricity supply at the main power box or disconnect power by removing fuse or turning off circuit breaker. This fan must be installed by a licensed and qualified electrician in accordance with local authority regulations.

Firstly connect internal wiring by clipping connectors together [a] [push into locked position], then [b] connect mains active, neutral and earth wires to supply terminal block on mounting plate. It is necessary to run wiring between the fan and wall controller. Wiring is required to be inaccordance with AS3000 and **the fan MUST be earthed**.

See page 7 for a detailed wiring diagram.

WITHOUT LIGHT

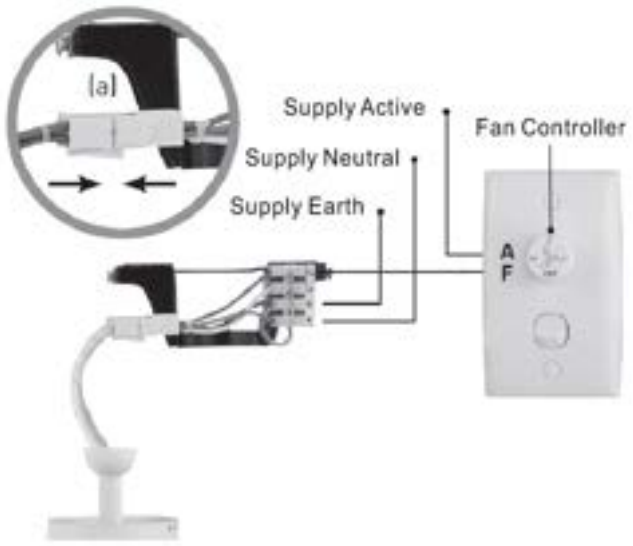

WITH LIGHT

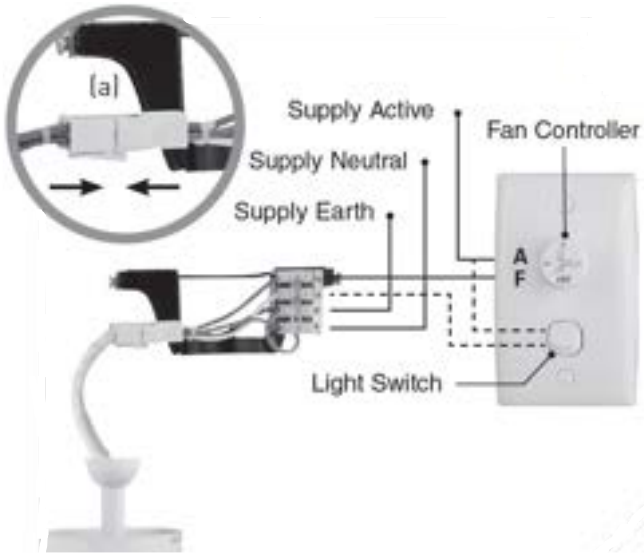

Important Notes: Means of disconnection must be incorporated in the fixed wiring in accordance with AS3000 wiring rules.
If this fan is a replacement for an existing fan, remove the existing wall speed controller.

After wiring is completed, attach the canopy to the hanger bracket by pushing upwards and twisting anti-clockwise. Locate screws in keyholes and tighten.

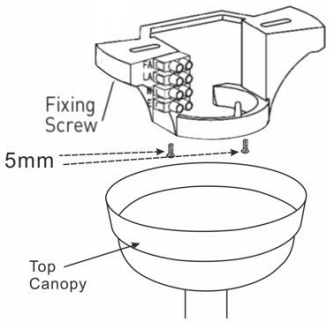

NOTE: THIS FAN MUST BE INSTALLED BY A LICENSED AND QUALIFIED ELECTRICIAN IN ACCORDANCE WITH LOCAL AUTHORITY REGULATIONS

INSTALLING FAN BLADES

Remove the two screws from the covering plate of blade-fixing hole. Insert blades one at a time through four slots around the centre band and secure with three screws for each blade through the top opening. Repeat this procedure for all blades Replace the cover plate and secure with two screws once all four blades have been firmly fitted.

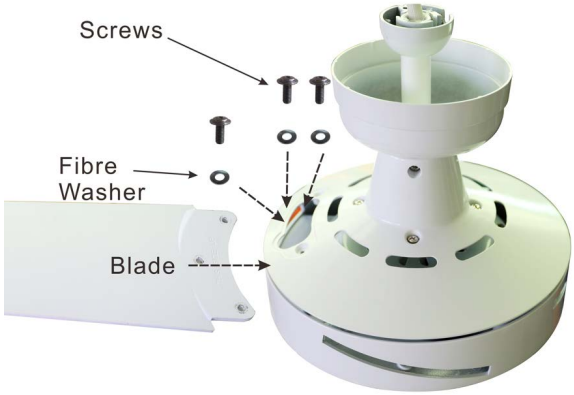

REMOVING LIGHT SHADE & BULB INFORMATION (SPECIFIC MODELS ONLY)

To remove the Lamp Shade carefully as shown below, turn anticlockwise to remove and clockwise to tighten the lampshade. Use two energy saving compact fluro or LED bulbs not exceeding 40 watt each.

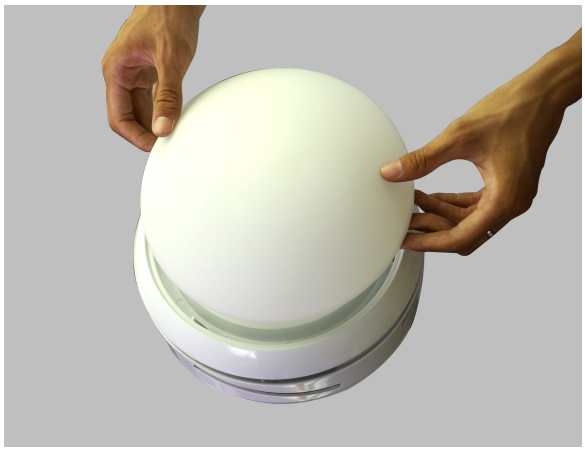

WINTER & SUMMER MODE

This fan incorporates a reversing switch. The switch is located on the side of the lower canopy, just above the motor and blades. With the switch set to the upper position [marked "Winter"] air flow is directed upwards . With the switch set to the lower position [marked "Summer"] air flow is directed downwards.

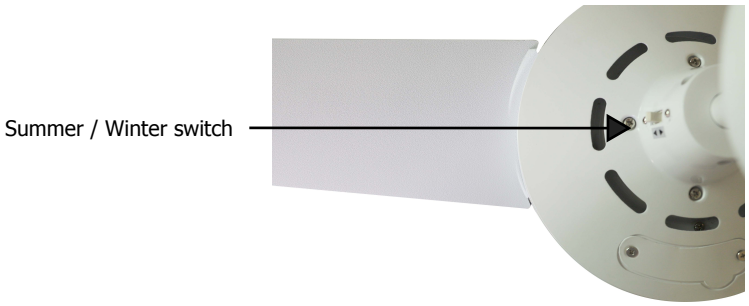

FAN WITH LIGHT EXPLODED DIAGRAM

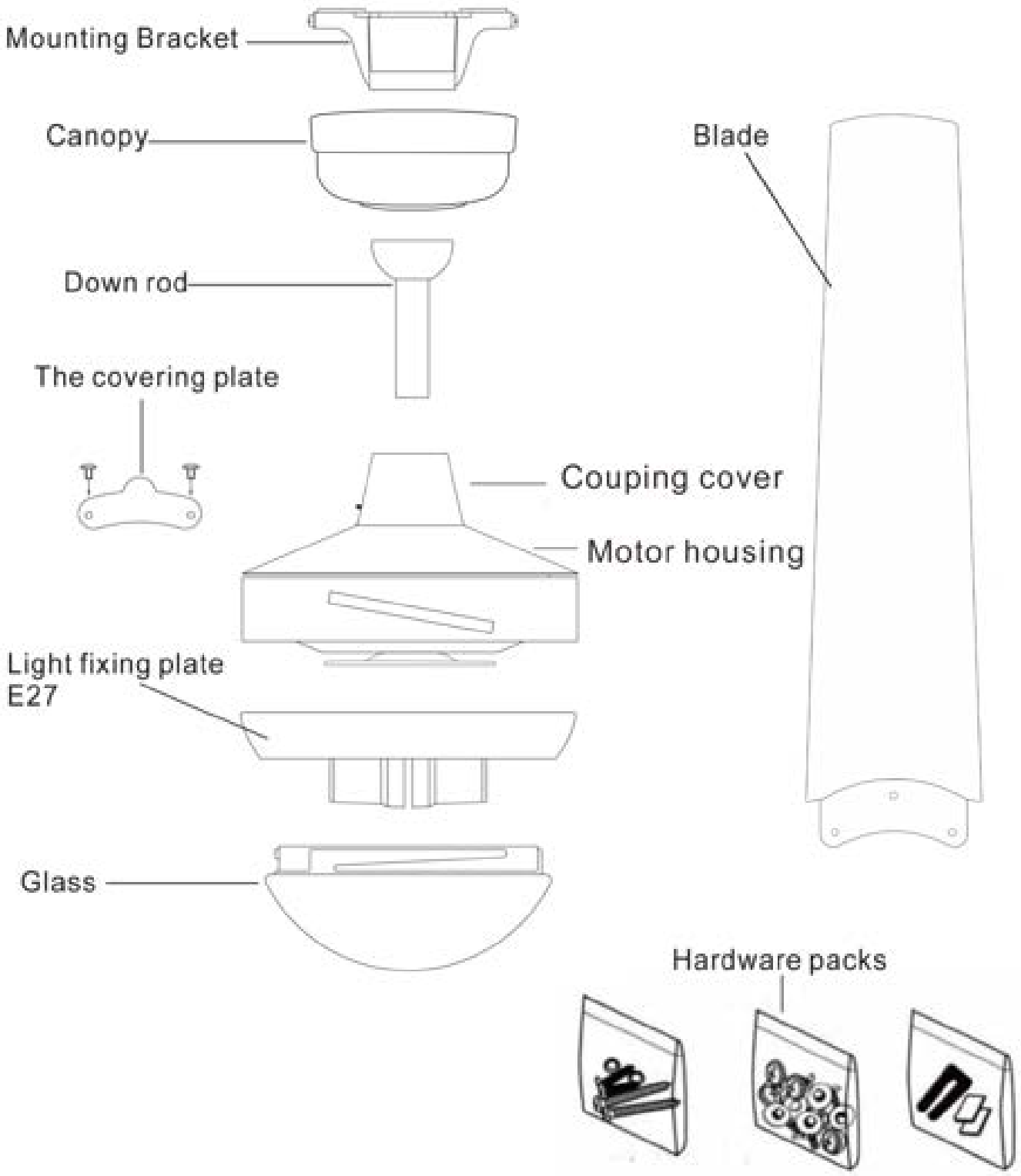

NOTE: THIS FAN MUST BE INSTALLED BY A LICENSED AND QUALIFIED ELECTRICIAN IN ACCORDANCE WITH LOCAL AUTHORITY REGULATIONS

FAN WITHOUT LIGHT EXPLODED DIAGRAM

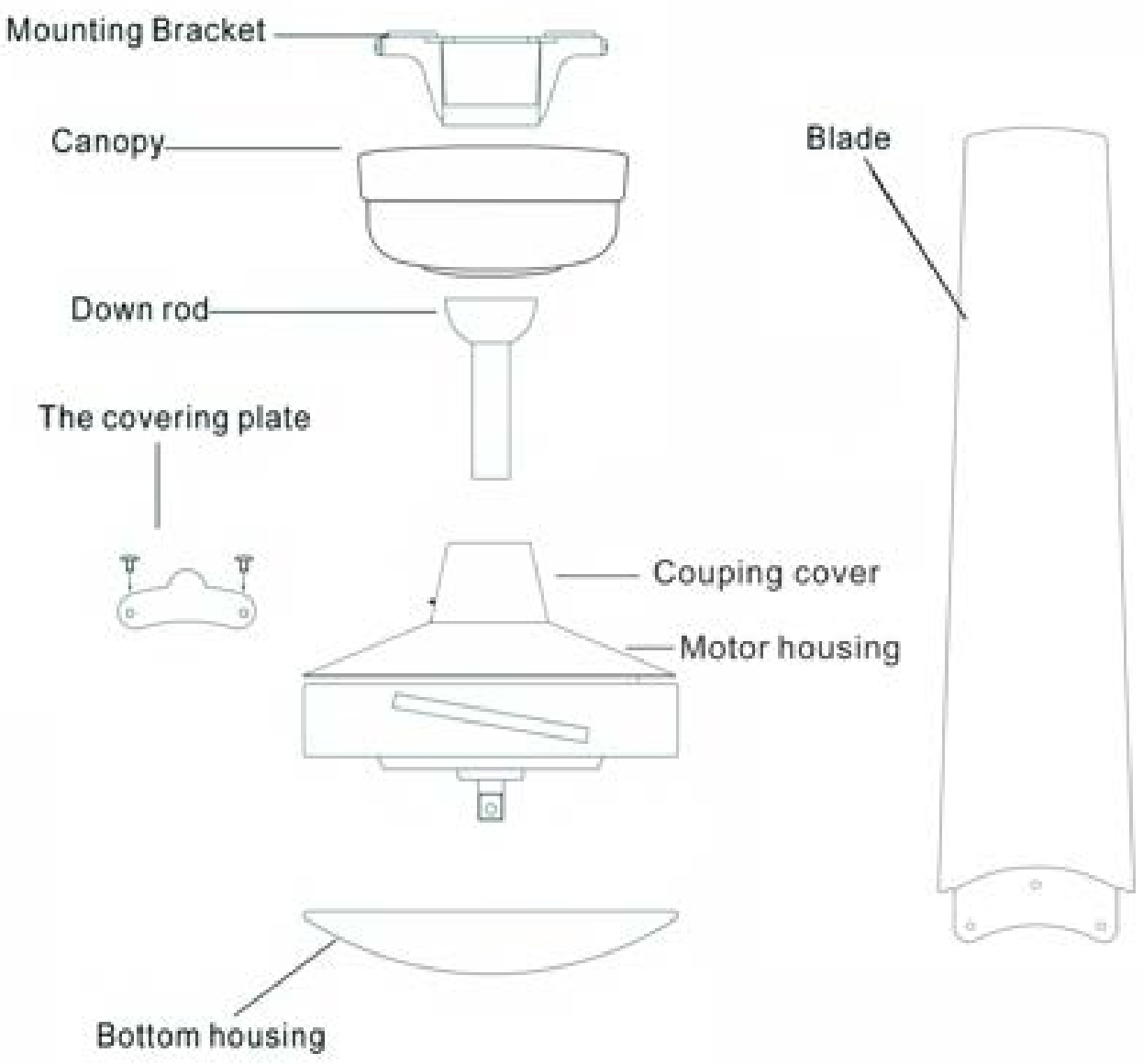

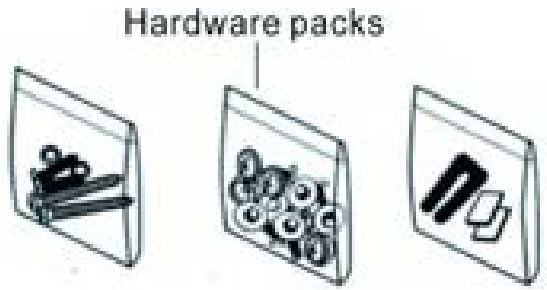

FAN WITH LED LIGHT EXPLODED DIAGRAM

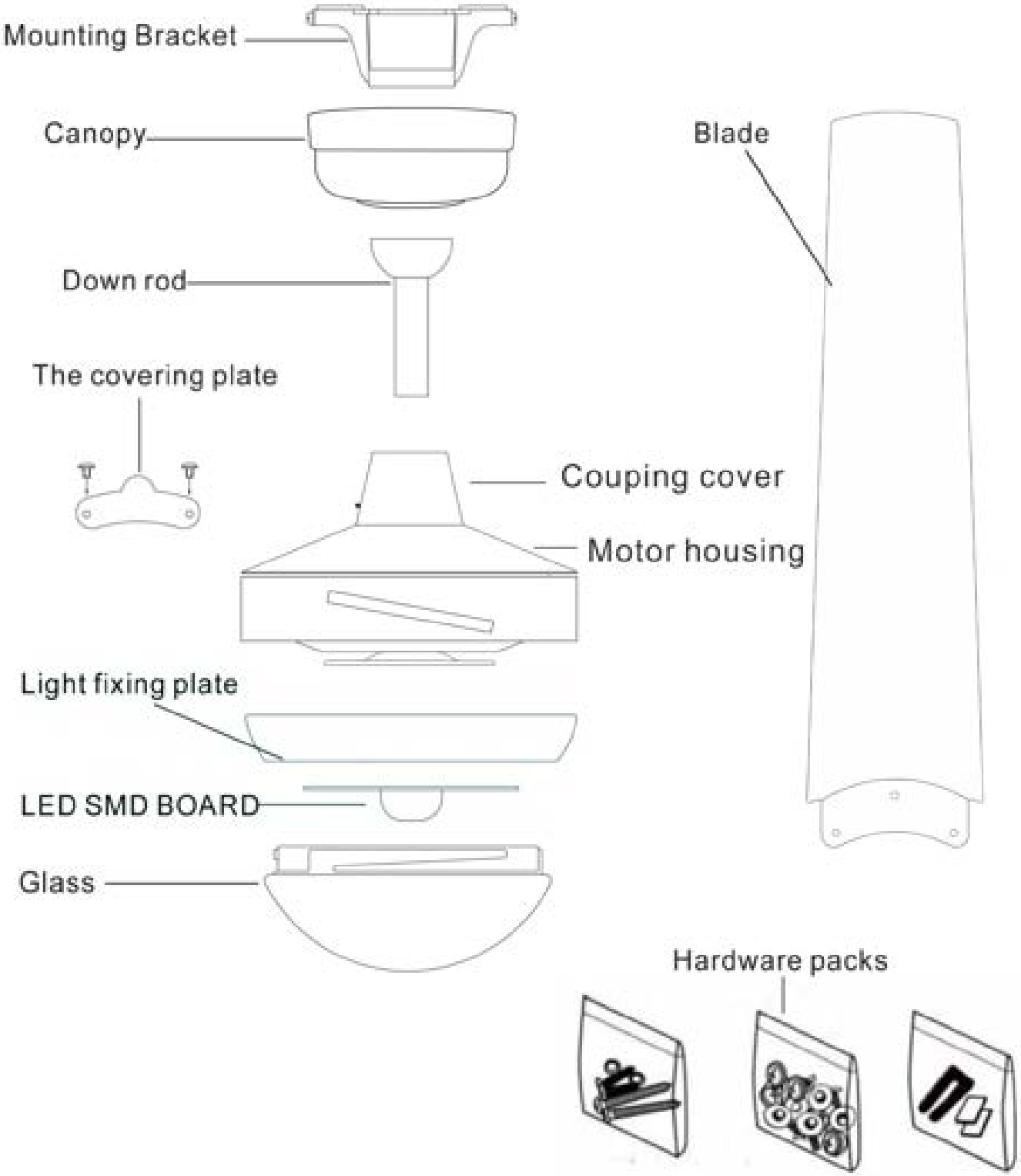

NOTE: THIS FAN MUST BE INSTALLED BY A LICENSED AND QUALIFIED ELECTRICIAN IN ACCORDANCE WITH LOCAL AUTHORITY REGULATIONS

WITH LIGHT(LED)

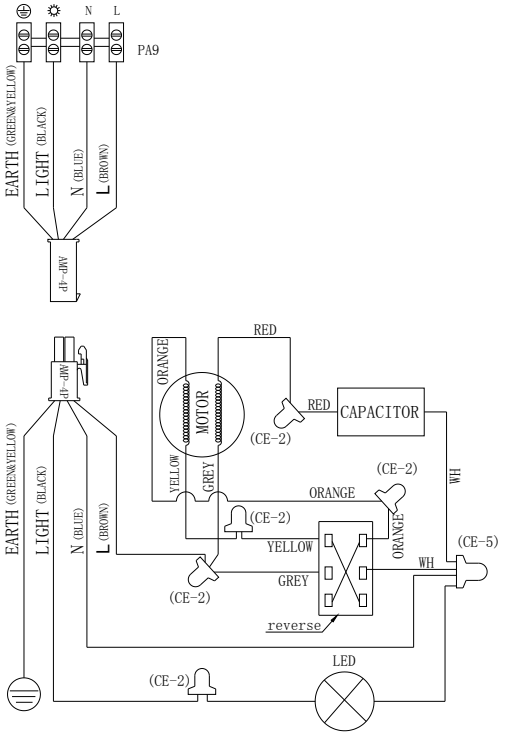

WITH LIGHT(E27)

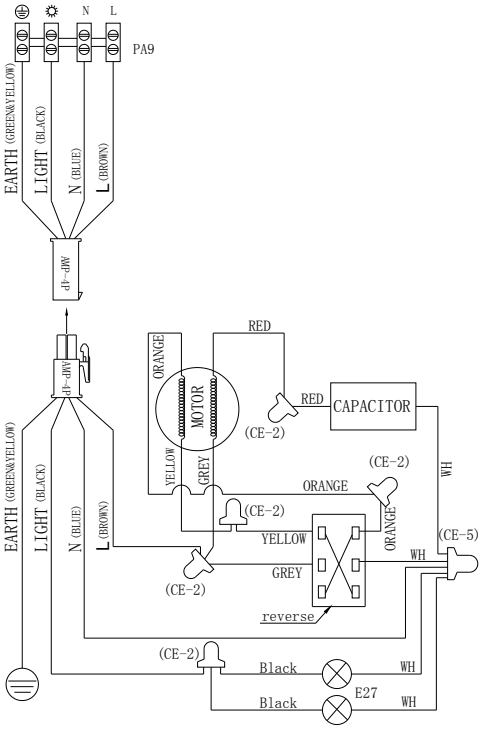

WITHOUT LIGHT

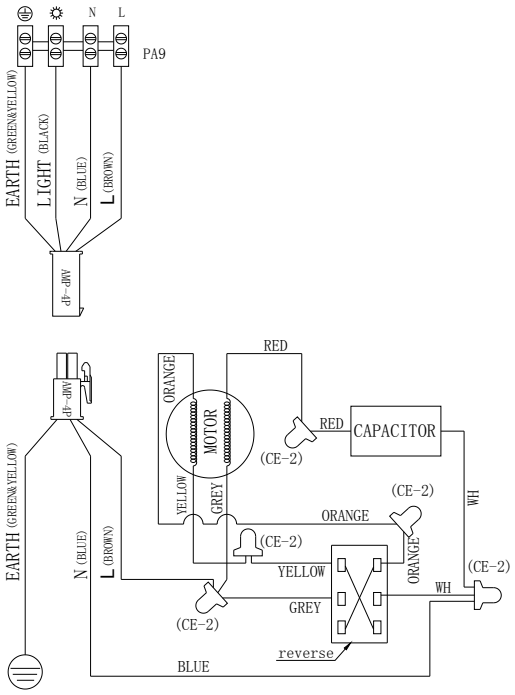

GENERAL MAINTENANCE & CLEANING

Regular cleaning of the ceiling fan blades and fan motor housing is the only maintenance that is required. Regular cleaning will reduce the build up of dust that can cause the fan to become out-of-balance (wobble). To reduce the possibility of electric shock or injury, it is highly recommended to isolate power to the ceiling fan.

1. When cleaning your fan, only use a soft brush or lint free cloth to avoid scratching the finish. DO NOT use water when cleaning your ceiling fan. It could damage the motor or blades and/or create the possibility of electric shock.
2. When dusting the blades, you must support the blades to prevent bending no pressure should be applied to the blade pivot. After cleaning the blades, check to ensure that the Drive Shaft is vertical, otherwise the fan may wobble.
3. Occasionally, it may be necessary to re-tighten the fan blades and fan motor housing fixing screws to prevent any clicking or humming sounds during operation. This is especially true in climates with broad temperature and humidity ranges.
4. If you experience any flaws in the operation of your fan, please check the points in the Trouble Shooting section of this manual.

GENERAL INFORMATION

1. All electrical motors, including fan motors make some noise, and may feel hot to the touch. This is NOT a fault.
2. Ceiling fans tend to move during operation due to the fact that they are not rigidly mounted. (Rigid mountings can generate excessive vibration and stress on the mountings). Movement of a couple of centimetres is quite OK and does not suggest that the fan will fall down. The fan is mounted securely on a metal Hanger Bracket with rubber cushioning and a ball joint to allow free movement. Please note that due to manufacturing variations not all ceiling fans are exactly the same some may move more than others.
3. Ceiling fans are an environmentally smart choice to help cool you in your home. They work by creating air flow which causes a cooling sensation on the skin. The faster the speed of the air flow, the greater the cooling sensation. Ceiling fans do not work by cooling the room, so they should be switched off when there is no one in the room, to save energy. The effectiveness of ceiling fans is also dependent on the humidity in the air they are more effective in humid environments, and less so in dry ones.
4. During winter, a reverse turning fan helps to reduce heating costs. Warm air rises to the ceiling, where it cannot be felt by the occupants of a room, especially in areas with high ceilings. The fan helps to keep warm air away from the ceiling, and mixes it with the air below.

NORMAL WEAR AND TEAR

Threaded components working slightly loose or parts even slightly damaged or bent during vigorous cleaning or bumping can cause wobble and noise. This is not covered under warranty, but care during maintenance and cleaning should prevent this from occurring.

NOTE: THIS FAN MUST BE INSTALLED BY A LICENSED AND QUALIFIED ELECTRICIAN IN ACCORDANCE WITH LOCAL AUTHORITY REGULATIONS

BALANCING FAN / WOBBLING TROUBLE SHOOTING

Please note that all ceiling fans are not the same, even in the same model—some may move more or less than others. Movement of a couple of centimetres is quite acceptable and does not suggest the fan will fall down.

Even though all blades are weighed and grouped by weight, it is impossible to eliminate wobble altogether. This should not be considered a fault. Ceiling fans tend to move during operation due to the fact that they are not generally rigidly mounted.

TRY THE FOLLOWING TO REDUCE A WOBBLING FAN;

1. Check all the blade mounting screws are tightened and secure.
2. Wobbling problems may result from inconsistent blade level. To check blade level, measure the distance from each blade tip to the ceiling. Note: If measurements are inconsistent:

   - check blade mount screws are not over tightened or loose, which can cause the blade tip to not all sit level;

   - An out of shape blade can cause wobbling, check by removing the blade and lay on a flat surface.
3. Blade tracking may be checked simply by use of a household ruler. Place the ruler vertically against the ceiling and even with the outside leading edge of a blade. Note the distance of the edge of a blade compared to the others. Turn the blade slowly by hand to check the remaining blades. If a blade is not in alignment, the blade is either out of shape / warped or the blade screws are not evenly tightened or either loose.
4. Wobble problem could also result from deviations in distance from blade to blade. To check blade separation, measure the distance from blade tip to blade tip. Should measurements vary, loosen screws connecting blades and brackets [one at a time] then shift blade to proper position and re-tighten screws.

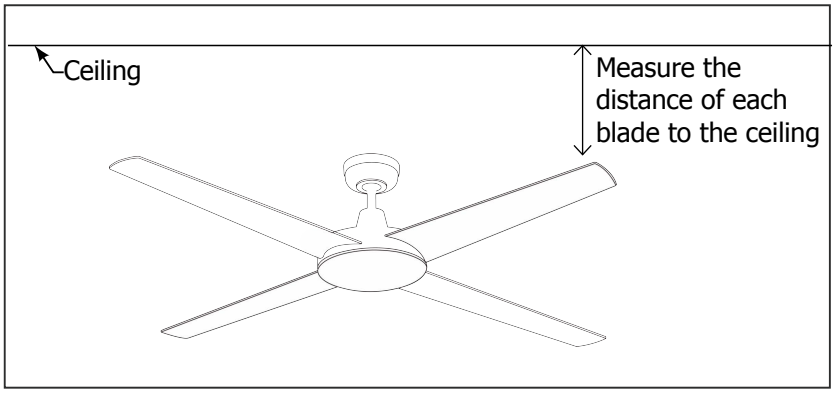

GENERAL TROUBLESHOOTING		
PROBLEM	POSSIBLE CAUSES	PROBABLE SOLUTIONS
Fan does not power up. (***Warning:*** *The ceiling fan must be switched OFF and the assistance of a licensed electrician may be required.)*	1. Fuse or circuit breaker blown 2. Loose power line connections to the fan 3. Reversing switch (where applicable) neither up or down	1. Check main and branch circuit fuses or circuit breakers 2. Check line wire connections to fan 3. Push switch either fully up or down
Fan Wobbles. (***Warning:*** *The ceiling fan must be switched OFF and the assistance of a licensed electrician may be required.)*	1. Fan blades not horizontal To ceiling 2. Blade screws are loose	Measure from ceiling to tip of blades, then rotate fan so all 4 blades are checked for equal height from ceiling (Note: adjustments may be made by slight Pressure up or down on blade holders). Make sure all screws are securely fastened.
Fan is Noisy. (***Warning:*** *The ceiling fan must be switched OFF and the assistance of a licensed electrician may be required.)*	1. Incorrect bulb(s) being used in light kit. 2. Loose fan blade screws. 3. Ceiling fan not secured against ceiling	1. Check main and branch circuit fuses or circuit breakers 2. Check line wire connections to fan. 3. Push switch either fully up or down
Mechanical Noise (***Warning:*** *The ceiling fan must be switched OFF and the assistance of a licensed electrician may be required.)*		1. Allow for at least 8 hours settling-in Period. 2. Call **1300 116 305** to report

NOTE: THIS FAN MUST BE INSTALLED BY A LICENSED AND QUALIFIED ELECTRICIAN IN ACCORDANCE WITH LOCAL AUTHORITY REGULATIONS

CEILING FAN WARRANTY INFORMATION

This warranty applies only to Australian states and its mainland territories. The benefits of this warranty are in addition to any rights offered under state or territory law.

Please also note the following, prior to requesting service, please consult the Troubleshooting section in the manual;

1. *All electric motors, including fans, make some noise and may feel hot to touch – this is not a fault.*
2. *Some fans wobble more than others – even the same model.*
3. *Blades are weighed to be within tolerance to minimise wobbling. In multiple installations do not mix blades from fans.*
4. *Fanlights can rattle and are not covered by warranty.*
5. *Blade and light shade replacements are not covered by in home servicing.*

This product warranty excludes to the extent possible under law any liability for consequential loss or damages directly or indirectly resulting from a faulty ceiling fan or accessory product that is not installed or maintained according to the installation instructions. When installed, maintained and used according to the instructions such loss or damage can be easily avoided or minimised.

This statement is required by the Australian Consumer Law: "Our goods come with guarantees that cannot be excluded under the Australian Consumer Law. You are entitled to a replacement or refund for a major failure and for compensation for any other reasonably foreseeable loss or damage. You are also entitled to have the goods repaired or replaced if the goods fail to be of acceptable quality and the failure does not amount to a major failure."

MAKING A CLAIM

You must have the original purchase receipt or bill of sale along with a proof of installation by a Licensed Electrician to make a warranty claim. No claim will be accepted without these documents being provided. Please contact AeroDC via the warranty hotline, web or email.

Please note carefully - If the product is found to be free of defects or the product is not functioning properly as a result of faulty installation or lack of maintenance then AeroDC or its service agent reserve the right to charge a service fee to rectify the reported problem.

CEILING FAN WARRANTY PERIOD.

The ceiling fan itself, excluding the Remote Control Transmitter and Receiver, is covered by a 3 year in home warranty. During this period, AeroDC will, at its discretion, repair or replace defective product. Labour and product delivery costs are bourne by AeroDC during this 3 year period. The cost of obtaining or using special access equipment (scissor lifts, scaffolding etc.) is specifically excluded, and it is the responsibility of the owner to provide such equipment and have it safely installed and operated.

BALANCE OF WARRANTY ON REPAIRED OR REPLACED PRODUCTS.

Any replaced or repaired product is covered only by the balance of the warranty remaining on the original article.

TRANSFER OF WARRANTY.

If the dwelling where the fan or remote control is installed changes hands, the balance of the warranty passes to the new owner, providing the original bill of sale and proof of installation by a Licensed Electrician for the product is retained by the new owner.

Warranty for the fan does not cover damage to the fan if it is moved from one dwelling to another during the warranty period. The warranty is voided in total if the product is sold as second hand goods.

NOT COVERED BY WARRANTY.

1. Any damage incurred after delivery to the owner that is not caused by a fault in the products materials or workmanship; damage from lightning or power surges; incorrect installation; damage due to incorrect installation; noise or other influence of ripple control or information access systems operated over power delivery infrastructure; water damage of any kind; installation or use outdoors; damage arising from connection to or use with alternative power systems (e.g. inverters, solar, etc.).
2. Interference from other devices operating on the same frequency (if applicable). This issue can be overcome by Reprogramming the remote control hand piece to the Fan. A mechanism to isolate power is highly recommended, this will remove the requirement to engage a licensed electrician to complete the programming steps.
3. Ceiling fans not installed by a licensed and qualified electrician in accordance with local authority regulations.
4. Incorrect operation of the ceiling fan, accidental damage, modification in any way or not servicing in accordance with the maintenance instructions.
5. Travelling costs incurred by AeroDC personnel or service agents exceeding 50kms between the nearest agents' service depot and the customer. These costs must be met by the purchaser.
6. Subject to any statutory provisions to the contrary, claims for damage to furniture, carpet, walls, ceilings, foundations or any other consequential loss either directly or indirectly resulting from a faulty ceiling fan.
7. Signals sent through the mains power supply by the electricity supplier for off peak hot water, and other signals including those for street lights and such. These signals may cause an intermittent humming in the ceiling fan. It is not the fault of the ceiling fan.
8. When humidity is high and temperature drops moisture condenses on metal surfaces including ceiling fans. The layer of moisture can be almost microscopic but it will affect the surface by depositing a tiny layer of dissolved salts or airborne acidic compounds and thus eventually leading to corrosion if the product is not properly and regularly cleaned.
9. A service call fee will be charged where; there is nothing wrong with the ceiling fan or; the defective operation of the ceiling fan is due to failure of electricity or; the installation is not in accordance with AeroDC instructions and/or applicable local regulations or; the defects have been caused by incorrect application or abuse of the ceiling fan or; the damage has been caused by unauthorised persons attempting to repair the fan.

NOTE: THIS FAN MUST BE INSTALLED BY A LICENSED AND QUALIFIED ELECTRICIAN IN ACCORDANCE WITH LOCAL AUTHORITY REGULATIONS

DOCUMENTS TO RETAIN FOR FUTURE WARRANTY CLAIMS

TO ASSIST WITH ANY WARRANTY CLAIMS ATTACH THE FOLLOWING DOCUMENTS FOR FUTURE REFERENCE.

1. Copy of the Purchasing Receipt.

2. Proof of Professional Installation - in-accordance with local authority Regulations (copy of installation Invoice, Safety Certificate or letter on Letter head including licence details)

National Warranty Hotline|1300 116 305 Monday to Friday 9am to 5pm AEST

Distributed by
EM Imports Pty Ltd
10 Overlord Place
Acacia Ridge Queensland
Australia 4110

Warranty & Support:
AeroDC
Ph: 1300 116 305
support@aerodc.com.au

National Warranty Hotline|1300 116 305 Monday to Friday 9am to 5pm AEST

NOTE: THIS FAN MUST BE INSTALLED BY A LICENSED AND QUALIFIED ELECTRICIAN IN ACCORDANCE WITH LOCAL AUTHORITY REGULATIONS